F.A.U. RTE.	SECTION	COUNTY	TOTAL SHEETS	SHEET NO.
2690	08-00065-00-SP	COOK	12	8
STA.		TO STA.		
FED. ROAD DIST. NO.	ILLINOIS	FED. AID PROJECT		

CONTRACT NO. 63021

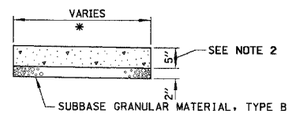

* CROSS SLOPE 2%

NOTES:

1. ALL REQUIRED EARTH EXCAVATION TO CONSTRUCT P.C.C. SIDEWALK SHALL BE INCLUDED IN THE COST FOR P.C.C. SIDEWALK.
2. WHEN FORMS ARE REMOVED FROM THE SIDEWALK EITHER THE SIDEWALK SHALL BE BARRICADED OR BACKFILLED WITHIN 24 HOURS.

P.C.C. SIDEWALK DETAIL

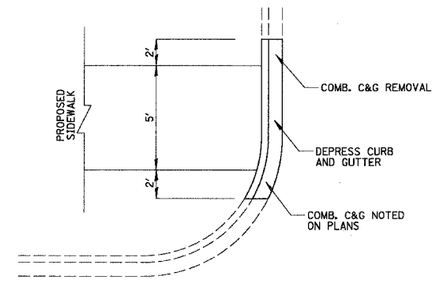

PROPOSED DEPRESSED CURB & GUTTER
EXISTING CURB & GUTTER NOT DEPRESSED

NOT TO SCALE

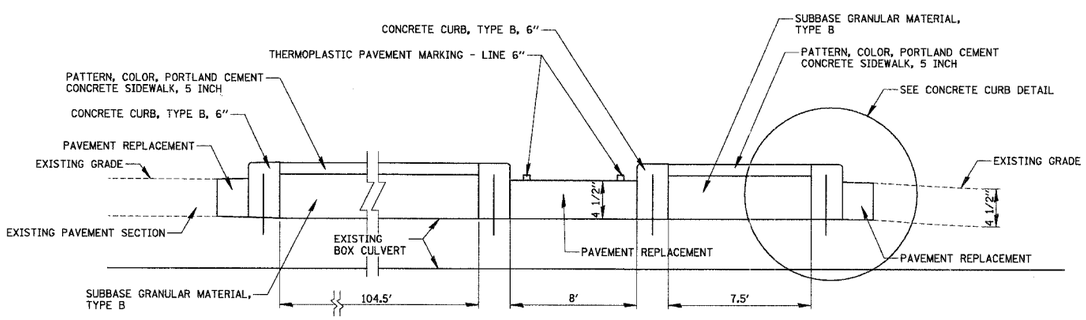

MEDIAN CROSS SECTION
SECTION A-A

NOT TO SCALE

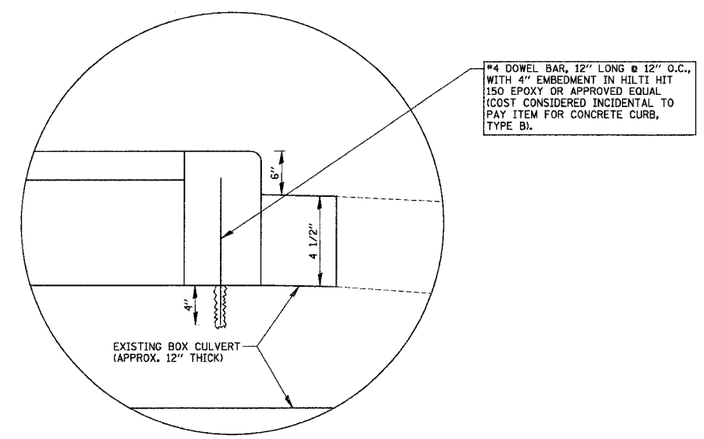

CONCRETE CURB DETAIL

NOT TO SCALE

NOTES:

1. CONTRACTOR SHALL BE RESPONSIBLE FOR ANY DAMAGE TO THE EXISTING BOX CULVERTS.

REVISIONS	
NAME	DATE

ILLINOIS DEPARTMENT OF TRANSPORTATION

CONSTRUCTION DETAILS

CITY OF NORTHLAKE
WOLF ROAD

SCALE:

DATE

DRAWN BY EDT

CHECKED BY AMP

CHRISTOPHER B. BURKE ENGINEERING LTD.
9575 West Higgins Road, Suite 600
Rosemont, Illinois 60018
(847) 823-0500

PLAN | NOTE BOOK NO. | SURVEYED | PLOTTED | ALIGNMENT CHECKED | R.O.W. CHECKED | PLAT OF THE NORTHLAKE | BY | DATE

PROFILE | NOTE BOOK NO. | SURVEYED | PLOTTED | GRADES CHECKED | R.O.W. CHECKED | STRUCTURE NOTATIONS CHK'D | BY | DATE