F.A.U RTE.	SECTION	COUNTY	TOTAL SHEETS	SHEET NO.
2678	08-00169-00-LT	DuPAGE	39	28
STA.	TO STA.			
FED. ROAD DIST. NO.	ILLINOIS	FED. AID PROJECT		

CONTRACT NO. 63027

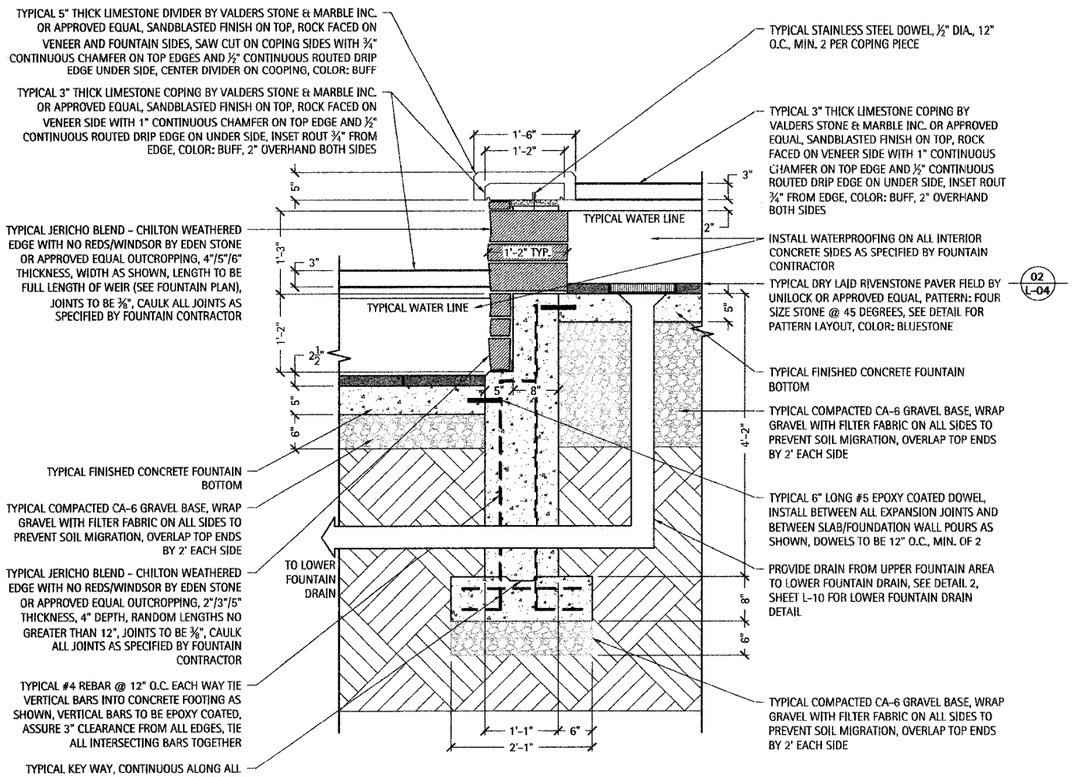

1 Fountain Weir Section Section - Section D-D'

Scale: 1" = 1'-0"

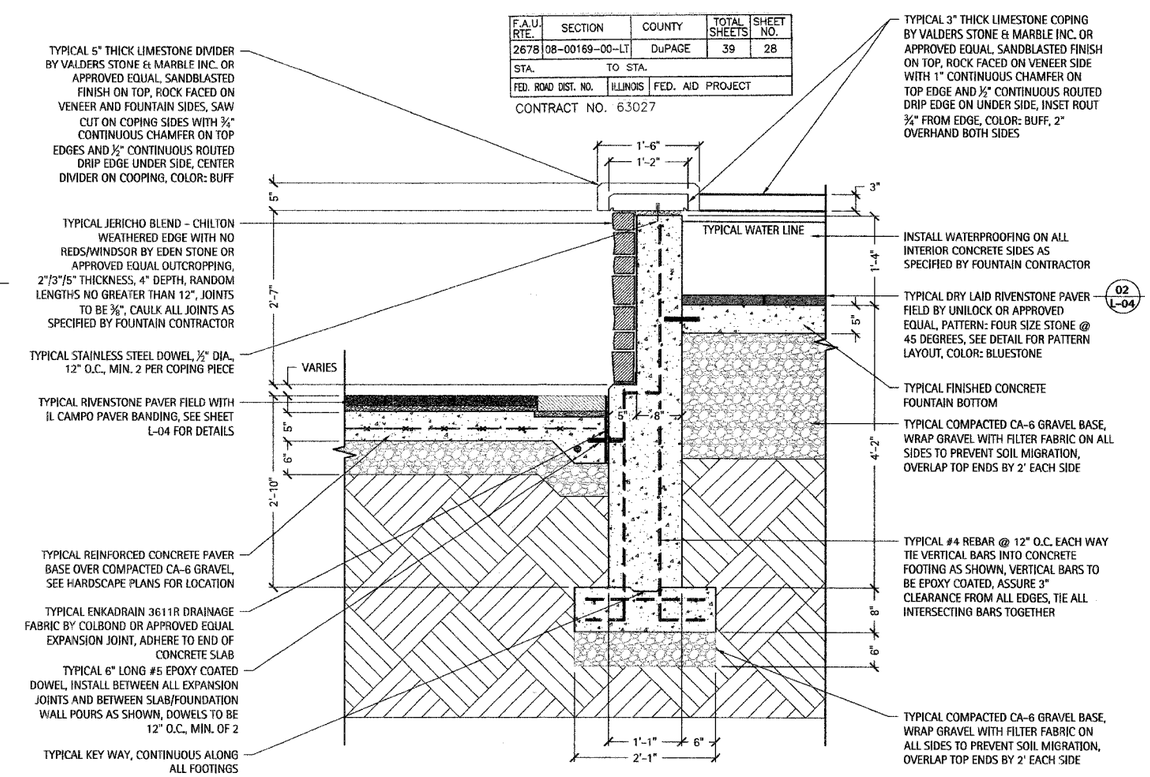

3 Upper Wall Section - Section C-C'

Scale: 1" = 1'-0"

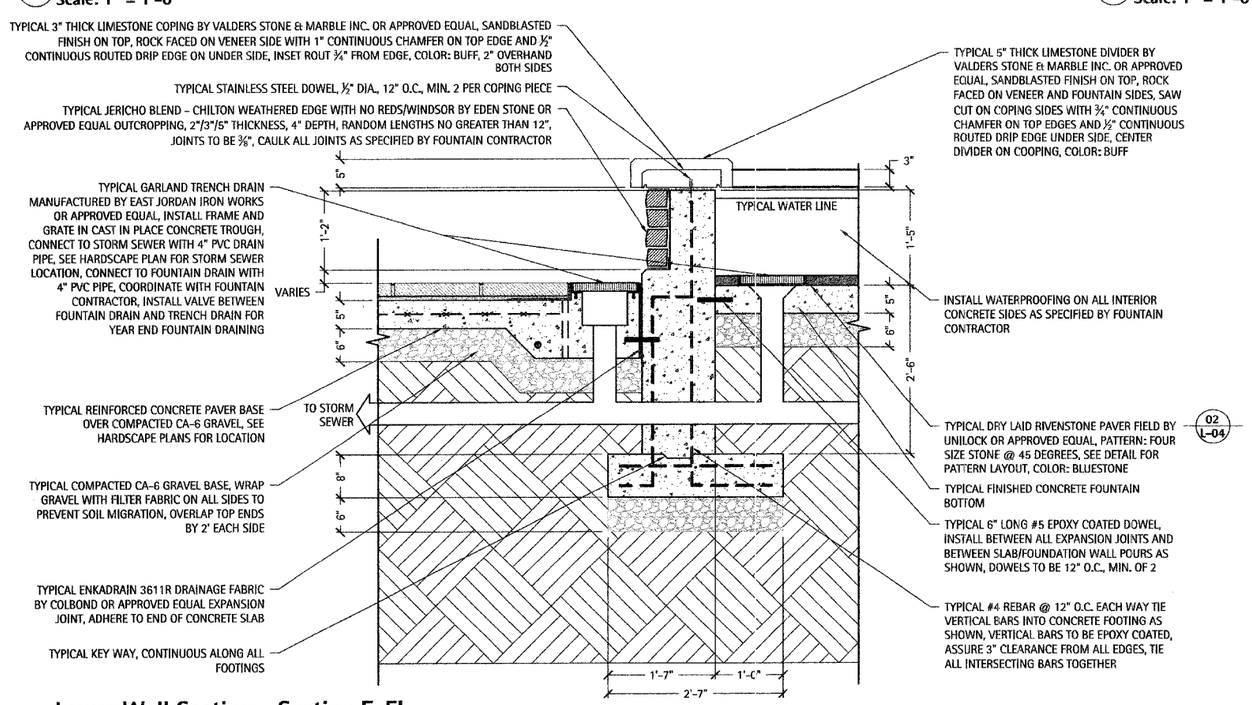

2 Lower Wall Section - Section E-E'

Scale: 1" = 1'-0"

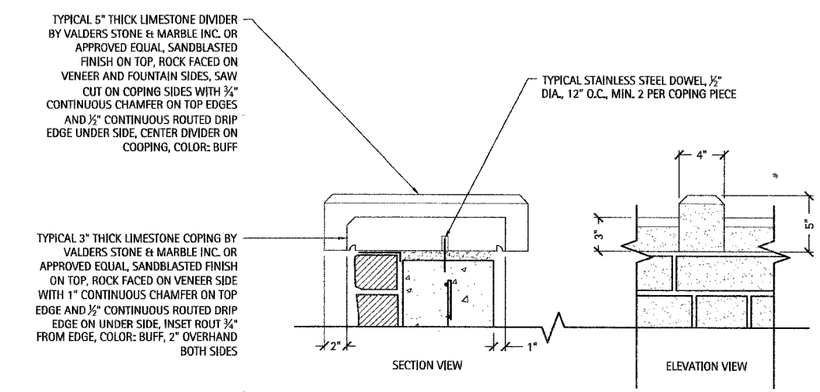

4 Coping Detail

Scale: 1" = 1'-0"

LAKOTA
THE LAKOTA GROUP INC
212 West Kinzie Street, 3rd Floor
Chicago, Illinois 60610
p 312.467.5445
f 312.467.5484
info@thelakotagroup.com

Planning
Urban Design
Landscape Architecture
Community Relations

CITY CENTRE PLAZA
Elmhurst, Illinois

City of Elmhurst

ISSUED FOR BID

Joint Utility Locating Information for Excavators
Call 48 hours before you dig

FOUNTAIN DETAILS

Revisions	
Issued for Bid	02/22/08

Date:	02/22/08
Drawn By:	MR, DS
Checked By:	ME

L-10