F.A.U. RTE.	SECTION	COUNTY	TOTAL SHEETS	SHEET NO.
2678	08-00169-00-LT	DuPAGE	39	37
STA.	TO STA.			
FED. ROAD DIST. NO.	ILLINOIS	FED. AID PROJECT		

CONTRACT NO. 63027

LAKOTA
THE LAKOTA GROUP INC
212 West Kinzie Street, 3rd Floor
Chicago, Illinois 60610
p 312.467.5445
f 312.467.5484
info@thelakotagroup.com

Planning
Urban Design
Landscape Architecture
Community Relations

POLICE PLAZA

Elmhurst, Illinois

City of Elmhurst

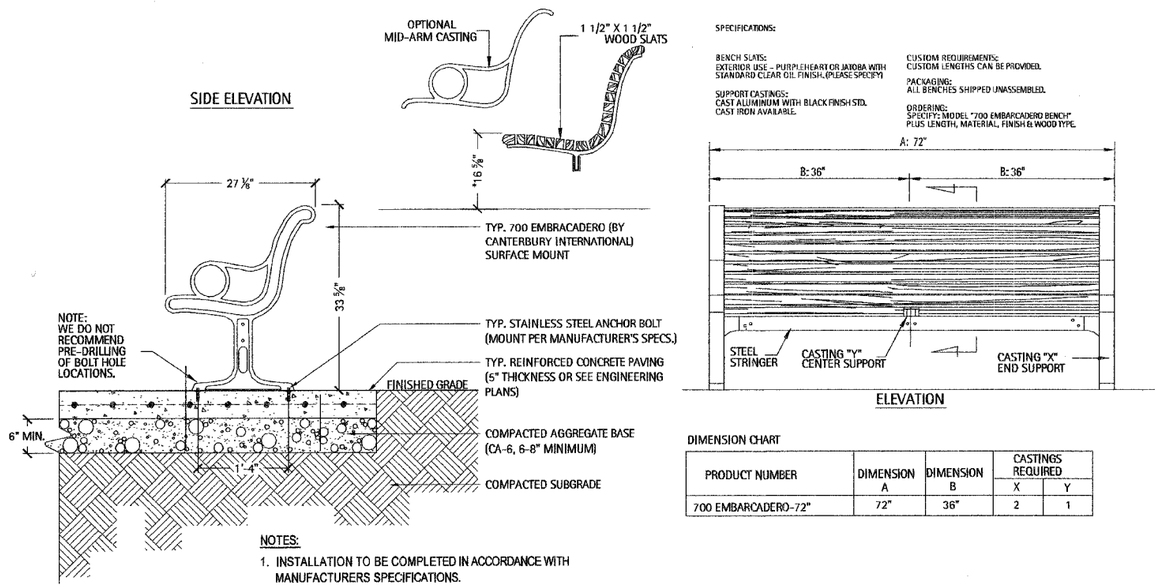

DIMENSION CHART

PRODUCT NUMBER	DIMENSION A	DIMENSION B	CASTINGS REQUIRED	
			X	Y
700 EMBARCADERO-72"	72"	36"	2	1

NOTES:

1. INSTALLATION TO BE COMPLETED IN ACCORDANCE WITH MANUFACTURERS SPECIFICATIONS.
2. DO NOT SCALE DRAWINGS.
3. CONTRACTORS NOTE: FOR PRODUCT AND COMPANY INFORMATION VISIT www.CADdetails.com/info REFERENCE NUMBER 382-017.

1 City Standard Bench (Over Concrete)
Scale: NTS

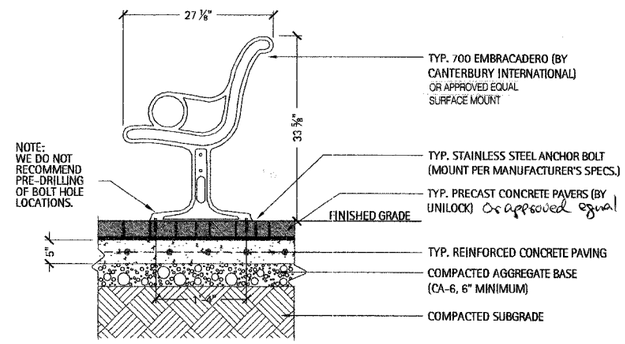

2 City Standard Bench (Over Pavers)
Scale: NTS

ISSUED FOR BID

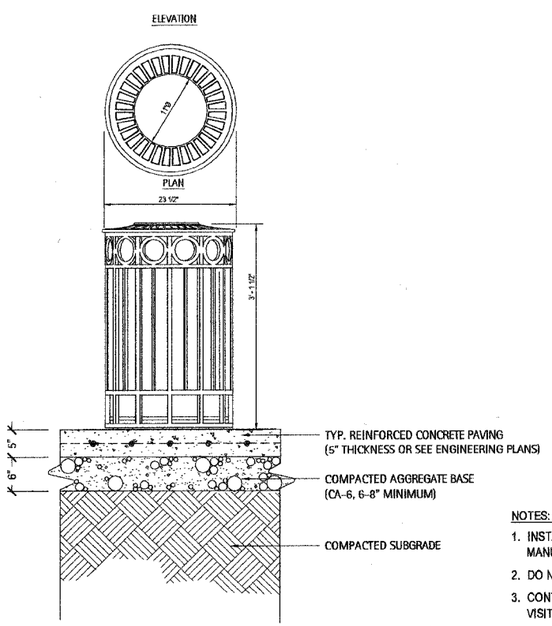

NOTES:

1. INSTALLATION TO BE COMPLETED IN ACCORDANCE WITH MANUFACTURERS SPECIFICATIONS.
2. DO NOT SCALE DRAWINGS.
3. CONTRACTORS NOTE: FOR PRODUCT AND COMPANY INFORMATION VISIT www.CADdetails.com/info REFERENCE NUMBER 382-181.

3 City Standard Trash Receptacle (Over Concrete)
Scale: NTS

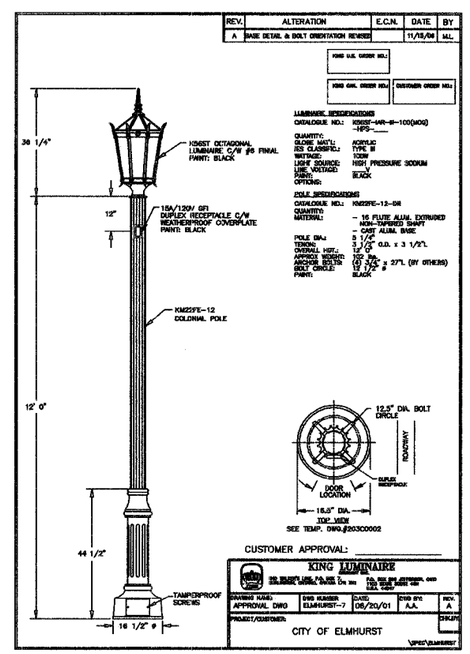

4 City Standard Light
Scale: NTS

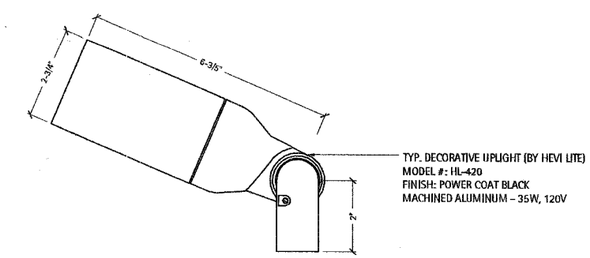

5 Typical Decorative Uplight (By Hevi Lite) Or approved equal.
Scale: NTS

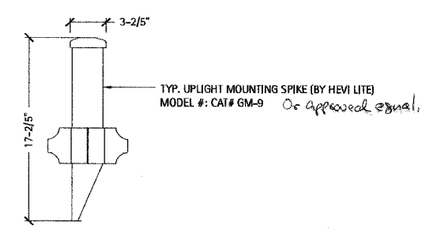

6 Typical Uplight Mounting Spike (By Hevi Lite)
Scale: NTS

Joint Utility Locating Information for Excavators
Call 48 hours before you dig

SITE FURNITURE/ GENERAL DETAILS

Revisions	
Issued for Bid	02/22/08

Date:	02/22/08
Drawn By:	MR, DS
Checked By:	ME

L-07