STATE OF ILLINOIS
DEPARTMENT OF TRANSPORTATION

ROUTE NO.	SECTION	COUNTY	TOTAL SHEETS	SHEET NO.
FAP 71	*	Ford	11	11
FED. ROAD DIST. NO. 7	ILLINOIS	FED. AID PROJECT-		

SHEET NO. 4
4 SHEETS

Contract Number: 66801 * (115-BR)1

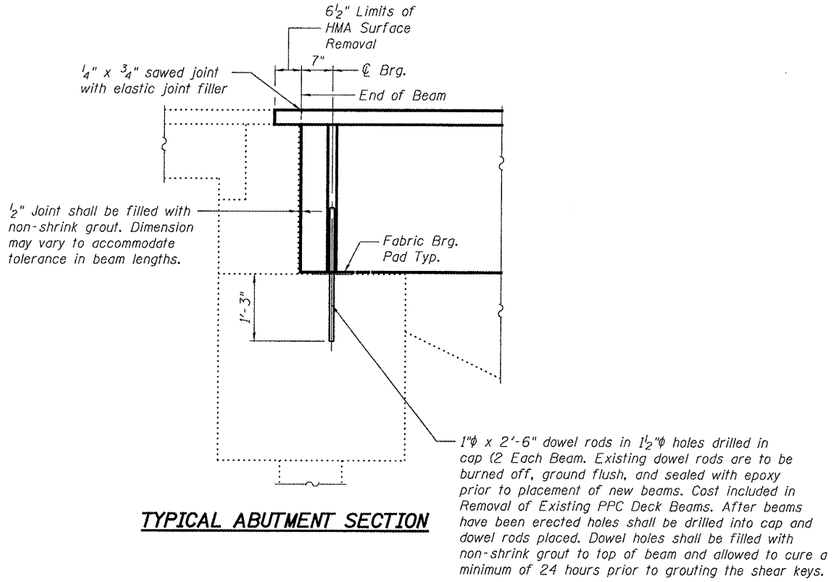

TYPICAL ABUTMENT SECTION

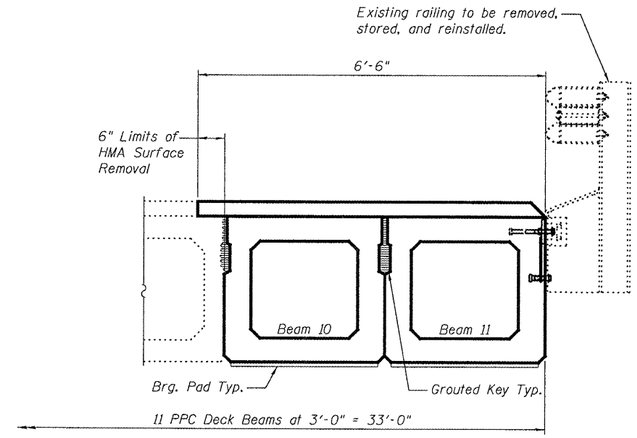

PARTIAL DECK CROSS SECTION

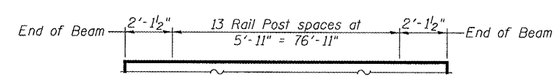

RAIL POST SPACING

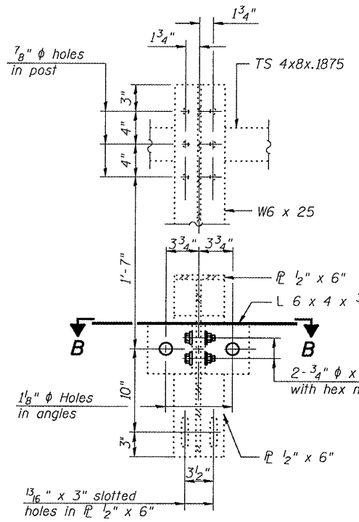

SECTION A-A

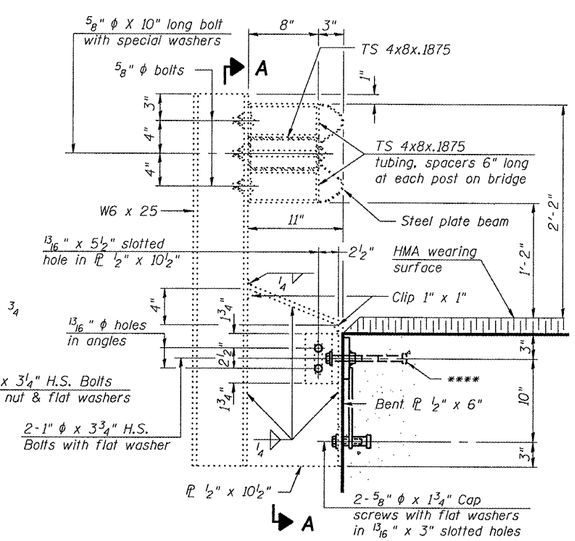

SECTION AT RAIL POST

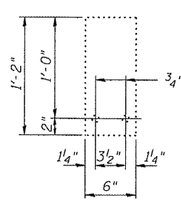

EXISTING ¼" SHIM PLATE

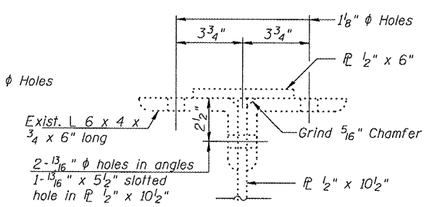

SECTION B-B

Notes:
All field drilled holes shall be coated with an approved zinc rich paint before erection.
Cost included with Steel Railing, Type WT.
All steel rail members shall be galvanized according to Article 509.05 of the Standard Specifications.
**** The studs of the anchor devices shall be placed below the top reinforcement bars and the outermost longitudinal reinforcement bar shall be placed directly above the studs of the rail post anchor device.

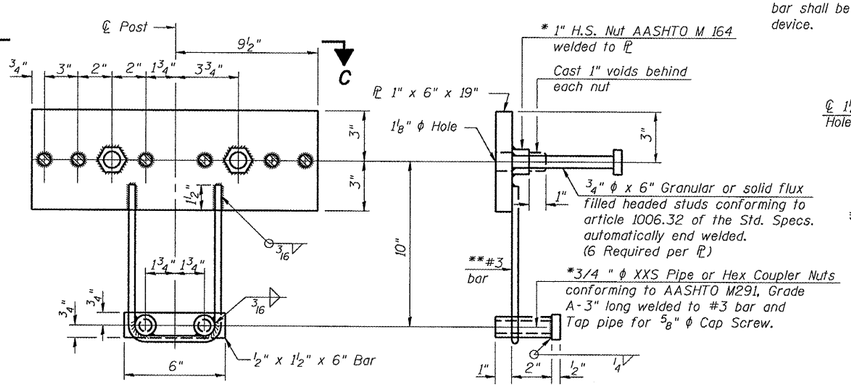

ANCHOR DEVICE

*Threaded areas shall be plugged or blocked off during casting of beam. Galvanized after fabrication.

**Whenever the lower insert assemblies interfere with strand locations, the #3 bars shall be cut and adjusted in order to allow raising or lowering of the lower inserts. Maximum adjustment not to exceed ½".

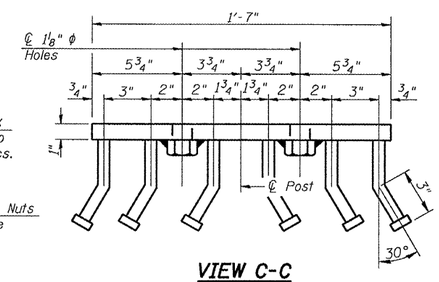

VIEW C-C

DESIGNED	A.J.B.
CHECKED	A.T.H.
DRAWN	Drew Christopher
CHECKED	A.J.B. A.T.H.

MAY 8, 2008
EXAMINED A. Carl Prugy — ENGINEER OF STRUCTURAL SERVICES
PASSED Ralph E. Anderson — ENGINEER OF BRIDGES AND STRUCTURES

RAIL & REPAIR DETAILS
F.A.P. RT. 71
FORD COUNTY
SN 027-0077

SLT-93-001-08

...\deck_beams_fy08\0270077.dgn 5/8/2008 9:56:17 AM