STATE OF ILLINOIS
DEPARTMENT OF TRANSPORTATION

ROUTE NO.	SECTION	COUNTY	TOTAL SHEETS	SHEET NO.
FAP 681	(13BR)1	LIVINGSTON	15	12
FED. ROAD DIST. NO. 7	ILLINOIS	FED. AID PROJECT-		

SHEET NO. 2
5 SHEETS

Contract Number: 66821

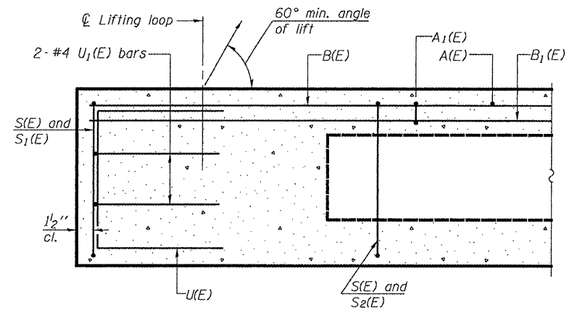

SECTION C-C

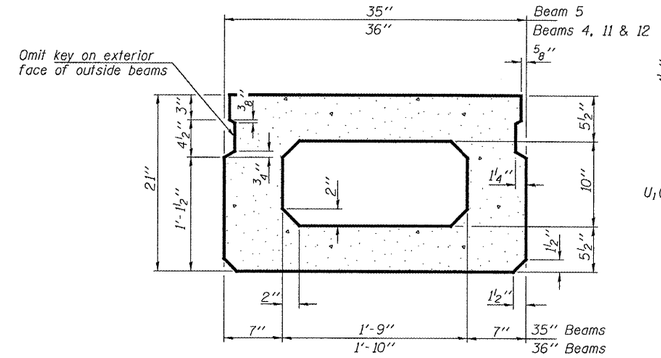

SECTION A-A
(Showing dimensions)

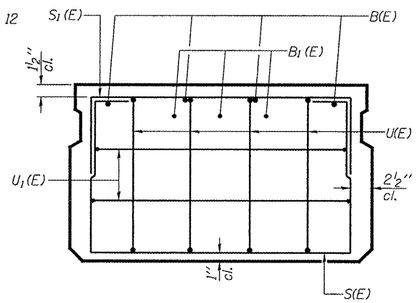

VIEW B-B

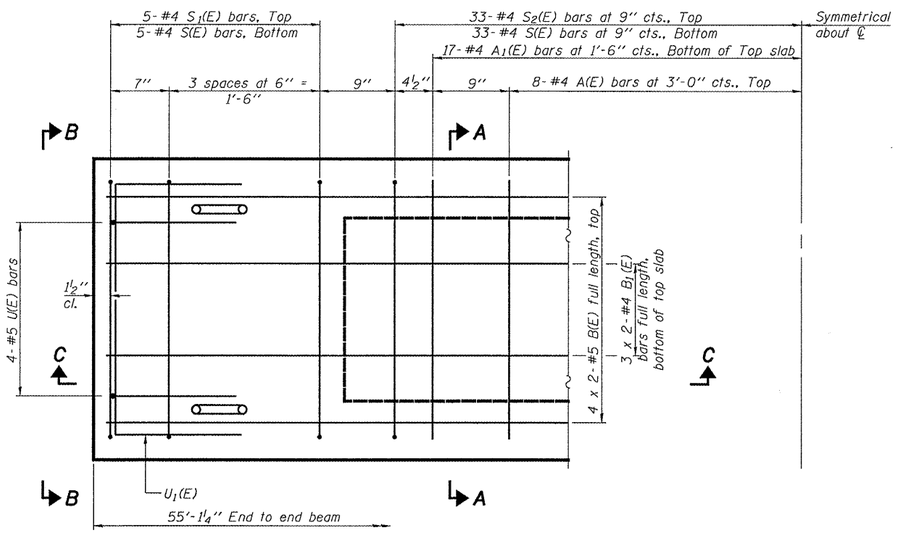

PLAN VIEW

Note: Spacing of S(E) and S2(E) bars may be adjusted up to 4" in the immediate area of the transverse tie diaphragms to miss the block outs for the transverse ties.

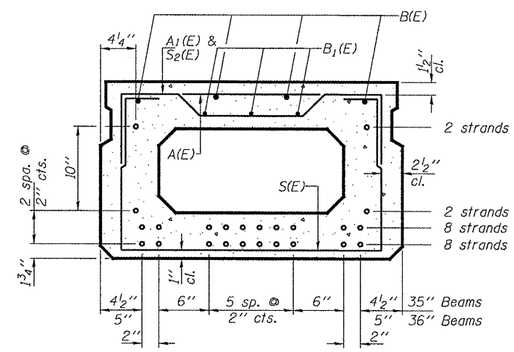

SECTION A-A
(Showing reinforcement and permissible strand locations)

Note: Place the number of strands specified in each row symmetrically about the centerline of beam in the permissible strand locations shown.

BAR LIST 35" BEAM ONLY
(For information only)

Bar	No.	Size	Length	Shape
A(E)	16	#4	2'-6"	—
A1(E)	34	#4	2'-10"	⌇
B(E)	8	#5	28'-7"	—
B1(E)	6	#4	28'-4"	—
S(E)	76	#4	6'-4"	⊐
S1(E)	10	#4	5'-6"	⊐
S2(E)	66	#4	5'-9"	⊐
U(E)	8	#5	4'-0"	⊔
U1(E)	4	#4	4'-11"	⊔

BAR LIST 36" BEAM ONLY
(For information only)

Bar	No.	Size	Length	Shape
A(E)	16	#4	2'-7"	—
A1(E)	34	#4	2'-11"	⌇
B(E)	8	#5	28'-7"	—
B1(E)	6	#4	28'-4"	—
S(E)	76	#4	6'-5"	⊐
S1(E)	10	#4	5'-7"	⊐
S2(E)	66	#4	5'-10"	⊐
U(E)	8	#5	4'-0"	⊔
U1(E)	4	#4	5'-0"	⊔

MINIMUM BAR LAPS
#4 bar = 1'-8"
#5 bar = 2'-2"

Note:
See sheet 3 of 5 for additional details and Bill of Material.
Bars indicated thus 4 x 2-#5 etc. indicates 4 lines of bars with 2 lengths per line.

REPAIR DETAILS
FAP 681
LIVINGSTON COUNTY
SN 053-0159

DESIGNED	ATH
CHECKED	AJB
DRAWN	baliva
CHECKED	ATH AJB

MAY 12, 2008
EXAMINED A. Carl Prugy
ENGINEER OF STRUCTURAL SERVICES
PASSED Ralph E. Anderson
ENGINEER OF BRIDGES AND STRUCTURES

PD-2136-0 8-29-07