CONTRACT 70695

ROUTE NO.	SECTION	COUNTY	TOTAL SHEETS	SHEET NO.
FAI 74	★	CHAMPAIGN	93	46
FED. ROAD DIST. NO. 7		ILLINOIS	FED. AID PROJECT-	

SHEET NO. 6
17 SHEETS

★ (10-92-8HB-1)BR

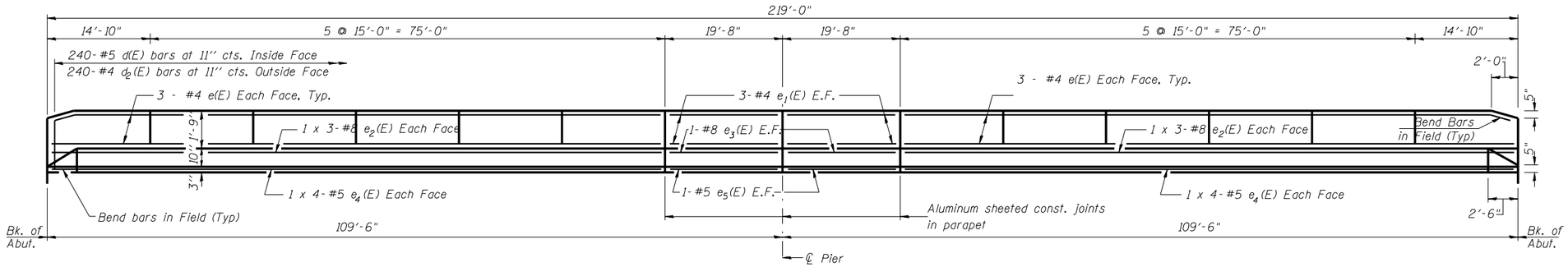

INSIDE ELEVATION OF PARAPET

MIN. BAR LAP

#4 bars = 1'-4"
#5 bars = 1'-8"
#8 bars = 3'-5"

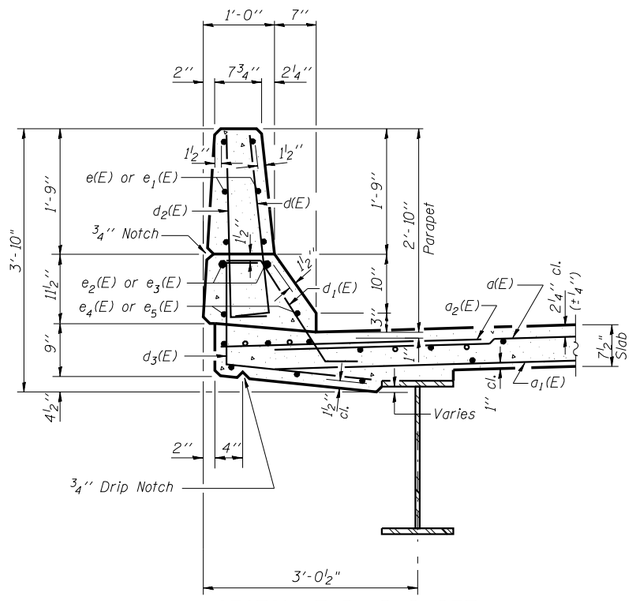

SECTION THRU PARAPET

The contractor shall construct the parapets according to the F shape parapet detailed in the special provisions in lieu of the New Jersey parapet detailed in the contract plans.

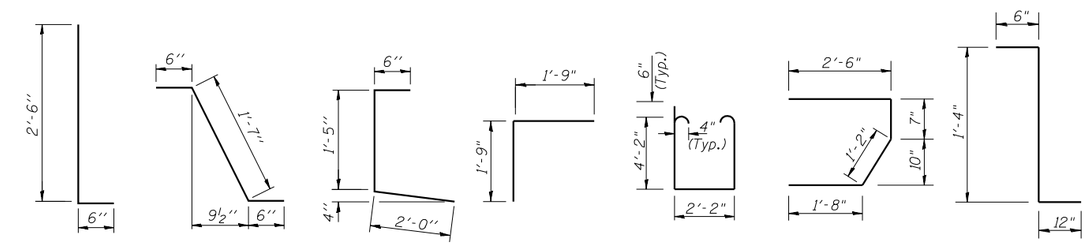

BARS d(E) & d2(E) | BAR d1(E) | BAR d3(E) | BAR v(E) | BAR S1(E) | BAR S(E) | BAR d4(E)

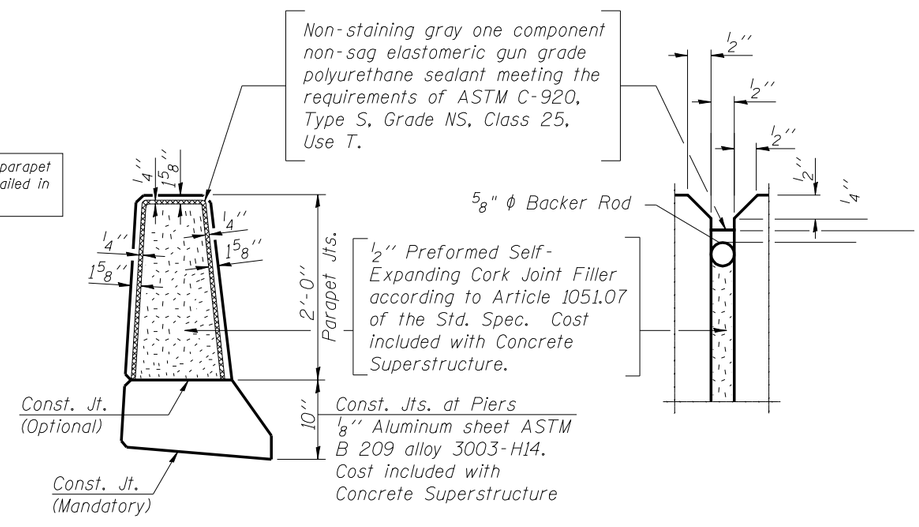

PARAPET JOINT DETAILS

SUPERSTRUCTURE BILL OF MATERIAL

Bar	No.	Size	Length	Shape
d(E)	405	#5	42'-0"	
d1(E)	293	#5	41'-0"	
d2(E)	810	#6	6'-0"	
b(E)	414	#5	25'-10"	
b1(E)	129	#6	26'-5"	
b2(E)	451	#5	21'-5"	
d(E)	480	#5	3'-0"	
d1(E)	468	#5	2'-7"	
d2(E)	480	#4	3'-0"	
d3(E)	480	#4	3'-11"	
d4(E)	12	#5	2'-10"	
e(E)	144	#4	14'-8"	
e1(E)	24	#4	19'-5"	
e2(E)	24	#8	32'-3"	
e3(E)	8	#8	19'-5"	
e4(E)	32	#5	23'-9"	
e5(E)	8	#5	19'-5"	
m(E)	4	#6	41'-0"	
m1(E)	6	#6	42'-11"	
m2(E)	24	#6	10'-2"	
m3(E)	10	#6	7'-3"	
m4(E)	4	#6	2'-10"	
s(E)	92	#5	5'-11"	
s1(E)	82	#4	11'-6"	
v (E)	84	#5	3'-6"	
Reinforcement Bars, Epoxy Coated			Pound	76,720
Concrete Superstructure			Cu. Yds.	307.3

Reinforcement bars designated (E) shall be epoxy coated.
Bars indicated thus 1 x 2 - #5 etc. indicates 1 line of bars with 2 lengths per line.

LIN ENGINEERING, LTD.
20 W. Chestnut, Chatham, Illinois 62629
(217) 483-4668 FAX (217) 483-4706
Designed By: MTH | Checked By: STD | Drawn By: JMD
Date: 11/02 | File: 0100277.DGN

REVISIONS	
NAME	DATE

ILLINOIS DEPARTMENT OF TRANSPORTATION

SUPERSTRUCTURE DETAILS
FAS RTE 518 (IL 49S) & FAP RTE 836 (C.H.22)
OVER FAI RTE 74 (I-74)
SECTION (10-92-8HB-1) BR
CHAMPAIGN COUNTY
STA. 1000+88.67 (I-74)
STA. 50+00.00 (IL 49S & C.H. 22)
STRUCTURE NO. 010-0277