CONTRACT #72679

FAU ROUTE	SECTION	COUNTY	TOTAL SHEETS	SHEET NO.
8071	*	SANGAMON	425	291
STA.		TO STA.		
FED. ROAD DIST. NO.	ILLINOIS	FED. AID PROJECT		

(84-9) RS-6; (G)Z *

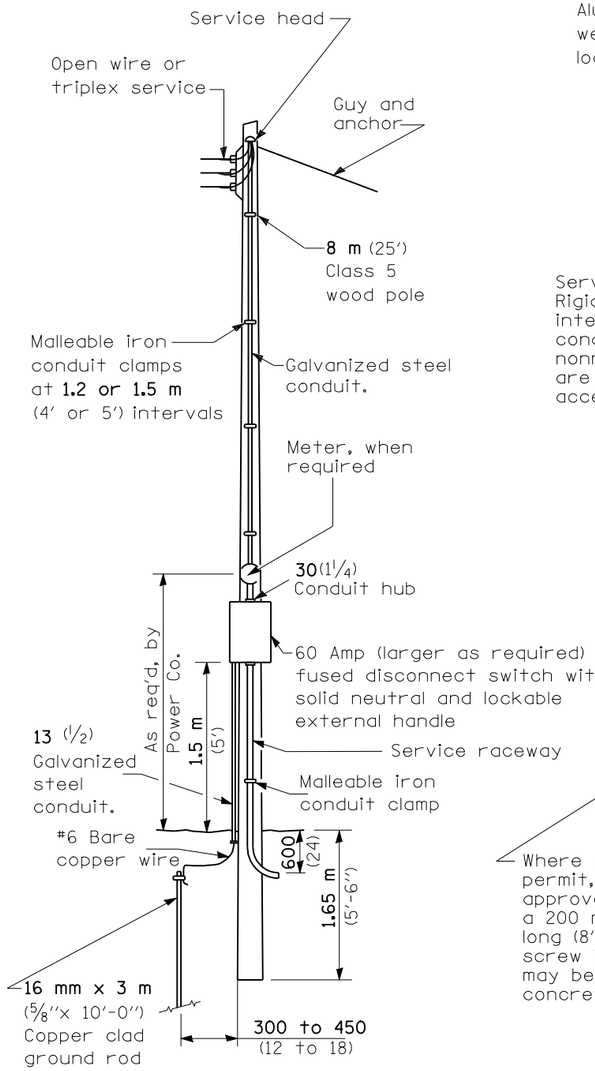

SERVICE POLE

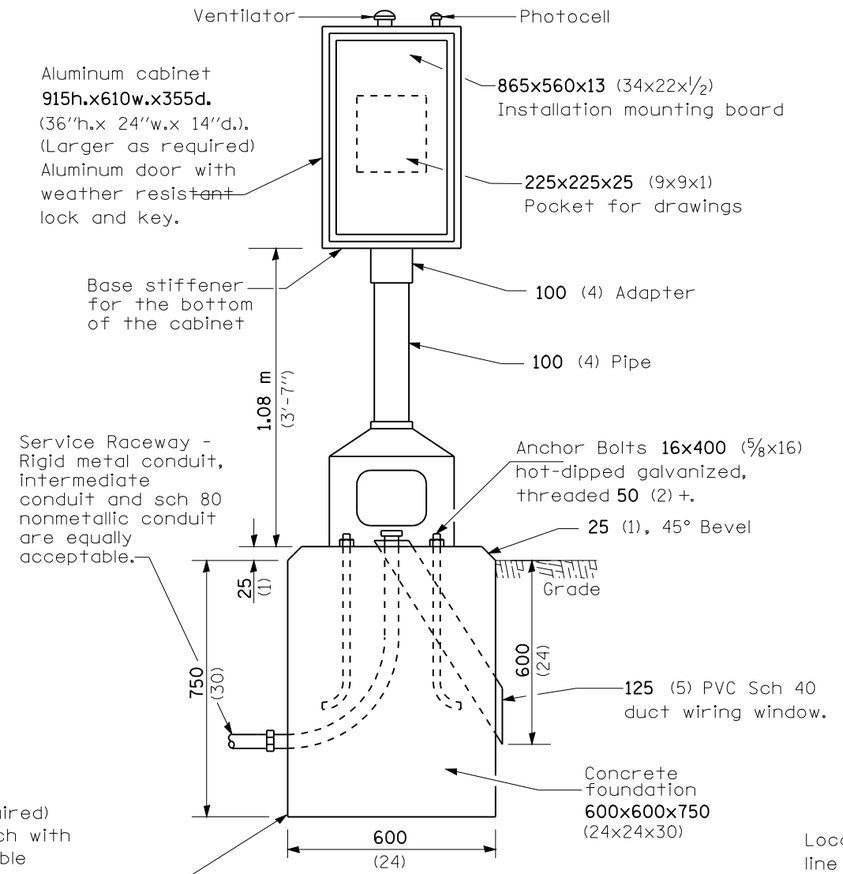

CONTROL INSTALLATION

Front View

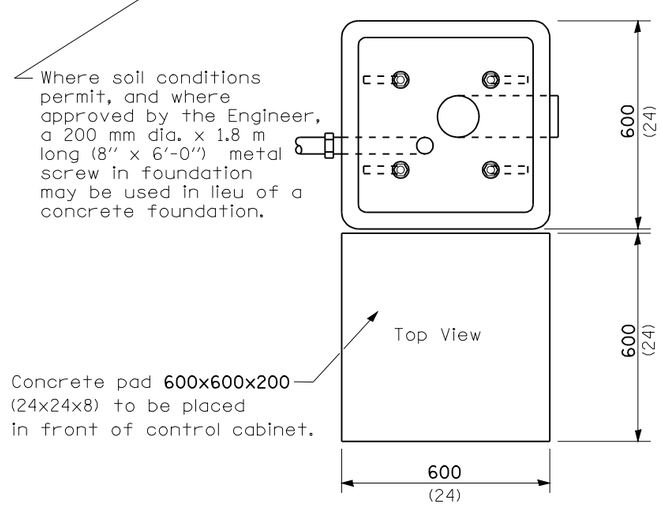

FOUNDATION

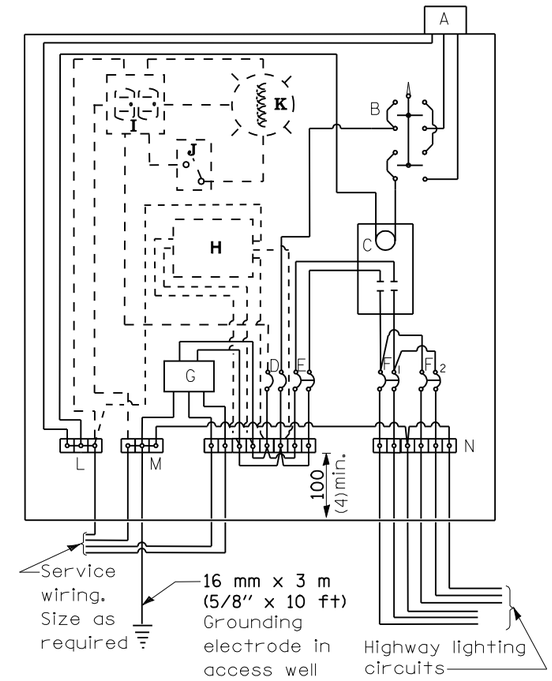

CONTROL SCHEMATIC

MATERIALS

- A Photocell w/ integral surge arrester (remote mount in urban areas)
- B 3 position selector switch HAND-OFF-AUTO
- C 2 pole, 100 amp*, electrically held contactor, 120V operating coil
- D 15 amp, 1 pole, circuit breaker
- E 60 amp*, 2 pole, main circuit breaker
- F 20 amp*, 2 pole, branch circuit breaker (typ). 2 spare c.b. required but not shown
- G Surge arrestor
- H Transformer (see notes), 1 KVA*, 240/480V primary, 120/240V sec, single phase
- I GFCI duplex receptacle
- J Single pole, single throw switch
- K Shielded security fixture with 100W lamp
- L Neutral bar
- M Equipment ground bar
- N Terminal block (typ)

(* = Size larger as needed)

GENERAL NOTES

Locate service pole and control installation adjacent to R.O.W. line with a minimum distance of 9 m (30') from the edge of pavement. Locate in close proximity to the utility transformer so the service drop does not exceed 46 m (150ft) and the total distance of overhead and underground cable (utility transformer to lighting controller) does not exceed 76 m (250ft). Exact location shall be established by the Engineer.

Wiring shall be panel board fashion. All bends shall be right angles. All runs shall vertical or parallel to panel board. Wires shall be grouped or laced.

All control installation components shall be U.L. listed.

Add receptacle, light, and switch in control cabinet, when specified.

For 480 V service, a step down transformer (dashed lines) is required.

Raceways shall terminate 75 (3) above top of concrete foundation.

Label equipment ground buss and neutral buss.

☒ 240 V. SERVICE

☐ 480 V. SERVICE
CB-RCS-60-240

DATE	REVISIONS
1/20/06	Corrected
1/31/08	Cabinet size increasd

All dimensions are in millimeters (inches) unless otherwise shown.

PEDESTAL MOUNT DETAIL

REVISIONS NAME	DATE

ILLINOIS DEPARTMENT OF TRANSPORTATION

LIGHTING DETAILS -9
CONTROL INSTALLATION
LGT006
(84-9) RS-6; (G)Z
SANGAMON COUNTY, ILLINOIS

SCALE: VERT. HORIZ. DRAWN BY
DATE Apr-30-2008 01:57:49PM CHECKED BY

Apr-30-2008 01:57:49PM
$FILE$