STATE OF ILLINOIS
DEPARTMENT OF TRANSPORTATION

ROUTE NO.	SECTION	COUNTY	TOTAL SHEETS	SHEET NO.
FAI 72		MACON	88	60
FED. ROAD DIST. NO. 7	ILLINOIS	FED. AID PROJECT-		

SHEET NO. 2
2 SHEETS

Contract Number: 74171

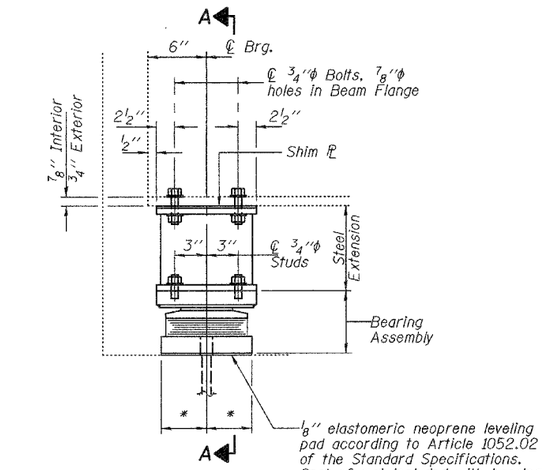

ELEVATION AT ABUTMENTS

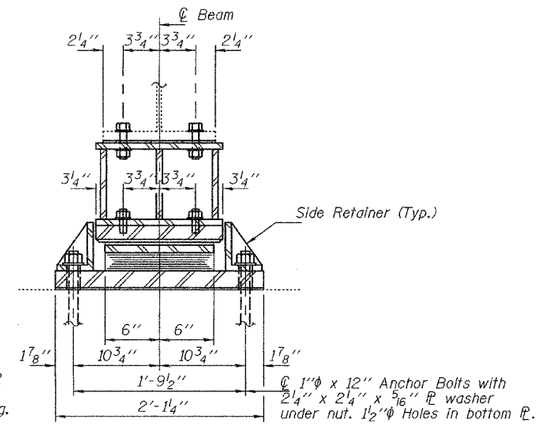

SECTION A-A

TYPE II TFE ELASTOMERIC EXP. BRG.

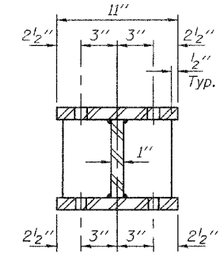

SECTION B-B

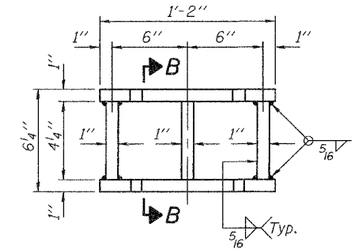

STEEL EXTENSION DETAIL

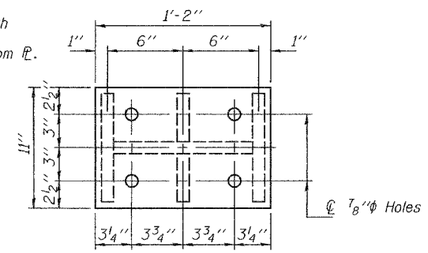

PLAN TOP AND BOTTOM PLATE

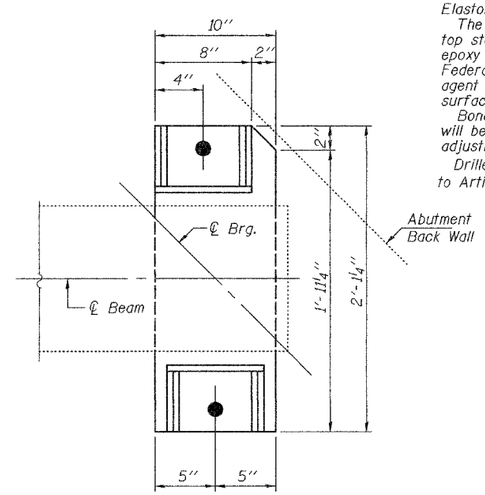

PLAN VIEW OF BOTTOM BEARING PLATE

Notes:

Diaphragm removal and reinstallation may be required to facilitate drilling holes. Cost included with Furnishing and Erecting Structural Steel.

New steel extensions, shim plates and connection bolts are included with Furnishing and Erecting Structural Steel.

Prior to ordering any material, the Contractor shall verify in the field all bearing height and shim thickness dimensions.

Min. jack capacity = 50 Tons.

Anchor bolts shall be ASTM F1554 all-thread (or an Engineer-approved alternate material) of the grade(s) and diameter(s) specified. ASTM A307 Grade C anchor bolts may be used in lieu of ASTM F1554 Grade 36 (Fy=36ksi). The corresponding specified grade of AASHTO M314 anchor bolts may be used in lieu of ASTM F1554.

Anchor bolts for Type II bearings shall be placed in holes drilled through the bottom bearing plate after members are in place. Side retainers shall be placed after bolts are installed.

Side retainers shall be included in the cost of Elastomeric Bearing Assembly, Type II.

The 1/8" TFE sheet shall be bonded directly to the top steel plate with a two-component, medium viscosity epoxy resin, conforming to the requirements of the Federal Specification MMM-A-134, Type I. The bond agent shall be applied on the full area of the contact surfaces.

Bonding of 1/8" TFE sheet during vulcanizing process will be permitted provided the process and method of adjusting assembly height is approved by the Engineer.

Drilled and set anchor bolts shall be installed according to Article 521.06 of the Standard Specifications.

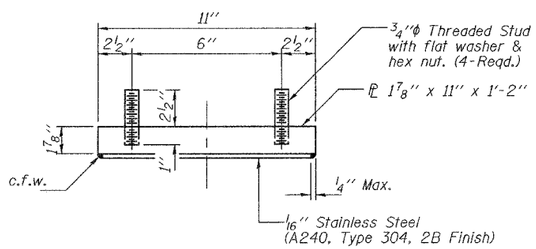

TOP BEARING ASSEMBLY

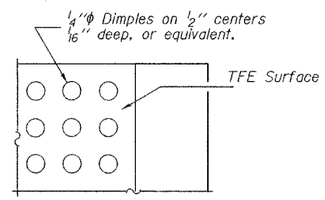

PLAN-TFE SURFACE

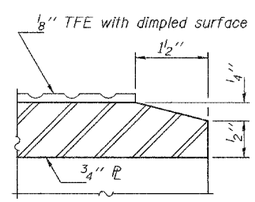

SECTION THRU TFE

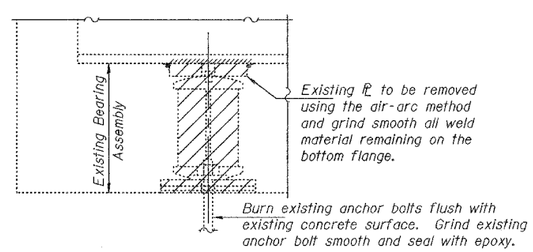

EXISTING BEARING REMOVAL DETAIL

Cost included with Jack and Remove Existing Bearings.

EAST ABUTMENT BEAM REACTIONS

RP	(K)	38.8
RL	(K)	43.9
Imp.	(K)	11.0
R (Total)	(K)	93.7

WEST ABUTMENT BEAM REACTIONS

RP	(K)	35.1
RL	(K)	44.7
Imp.	(K)	12.3
R (Total)	(K)	92.1

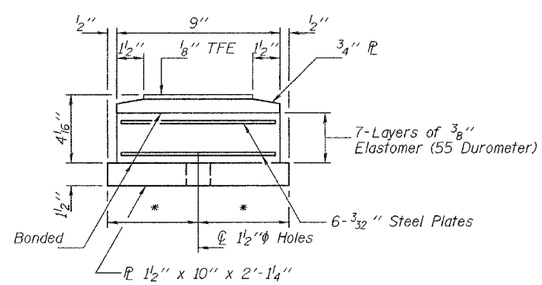

BOTTOM BEARING ASSEMBLY

* For hole location see Plan View of Bottom Bearing Plate

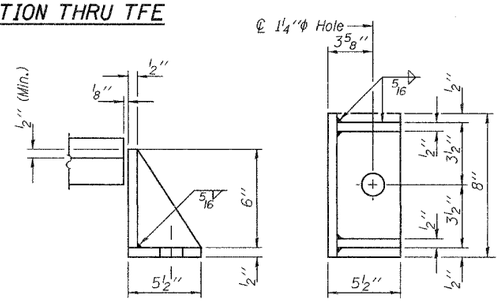

SIDE RETAINER

Equivalent rolled angle with stiffeners will be allowed in lieu of welded plates.

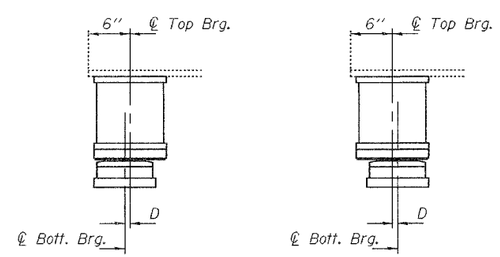

BELOW 50° F. (Move bott. brg. away from fixed brg.)

ABOVE 50° F. (Move bott. brg. toward fixed brg.)

SETTING ANCHOR BOLTS AT EXP. BRG.

D = 1/8" per each 100' of expansion for every 15° temp. change from the normal temp. of 50°F.

SHIM PLATES

SN 058-0095 at W. Abut.	
Girder 3	5/8" x 11" x 12"
Girder 4	5/8" x 11" x 12"

SN 058-0096 at W. Abut.	
Girder 4	1/4" x 11" x 12"

BILL OF MATERIAL

Item	Unit	Total
Elastomeric Bearing Assembly Type II	Each	24
Jack and Remove Existing Bearings	Each	24
Furnishing and Erecting Structural Steel	Pound	3420
Anchor Bolts, 1"ϕ	Each	48

DESIGNED		AJB
CHECKED		SJB
DRAWN		Steffen
CHECKED	AJB	SJB

APRIL 18, 2008
EXAMINED — ENGINEER OF STRUCTURAL SERVICES
PASSED — ENGINEER OF BRIDGES AND STRUCTURES

ABUTMENT BEARING REPLACEMENT DETAILS
FAI RT. 72
MACON COUNTY
SN 058-0095 & 0096

...\kms\0580095 & 0096.dgn 18-Apr-08 08:35:07