CONTRACT NO. 85427

F.A. RTE.	SECTION	COUNTY	TOTAL SHEETS	SHEET NO.
	05-00174-00-BT	ROCK ISLAND	112	84
STA.		TO STA.		
FED. ROAD DIST. NO.	ILLINOIS	FED. AID PROJECT		

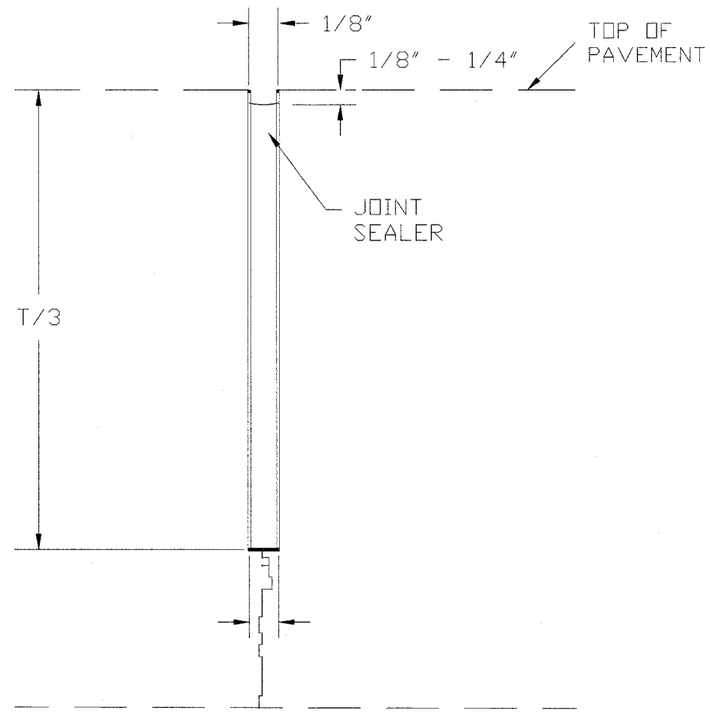

1. AFTER SAWING, BLOW WITH OIL- AND WATER- FREE COMPRESSED AIR TO ELIMINATE DEBRIS AND WATER
2. SEAL WITH APPROVED JOINT SEALER

DETAIL OF JOINT FILLER

REVISION	BY	DATE
REVISED	TAB	01/07/00
STANDARDIZED	CWE	06/28/91

CITY OF ROCK ISLAND
ENGINEERING DIVISION

STANDARD NO. 115

REVISIONS NAME	DATE

ILLINOIS DEPARTMENT OF TRANSPORTATION

CITY OF ROCK ISLAND STANDARDS

SCALE: VERT. HORIZ.
DATE

DRAWN BY
CHECKED BY

PLOT DATE = $DATE$
FILE NAME = $FILEL$
PLOT SCALE = $SCALE$
USER NAME = $USER$