ROUTE NO.	SECTION	COUNTY	TOTAL SHEETS	SHEET NO.
T.R. 159	01-11126-00-BR	IROQUOIS	23	6
DOUGLAS ROAD DIST.	ILLINOIS	BROS-075(128)		

CONTRACT NO. 87300

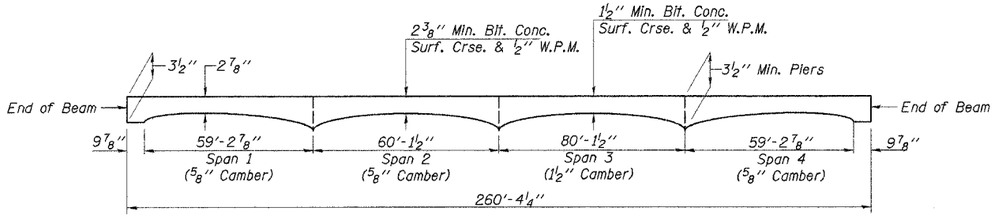

PROFILE OF OVERLAY

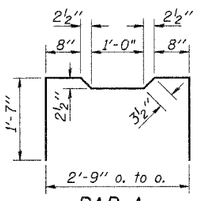

BAR A1

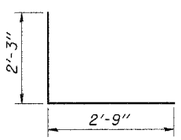

BAR D

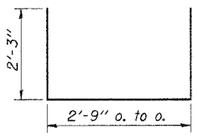

BARS U & U1

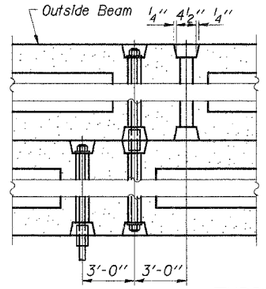

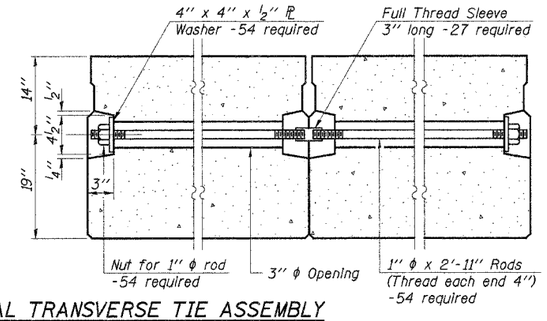

TYPICAL TRANSVERSE TIE ASSEMBLY

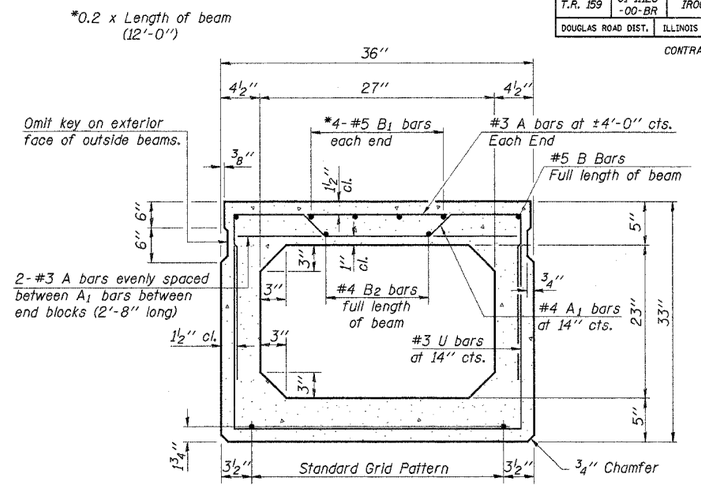

TYPICAL SECTION

10-½" ϕ Strands Each Strand Stressed to 30,900 Lbs.
10-Strands 1¾" up

Note:
Place strands symmetrically about ℄ of beam.

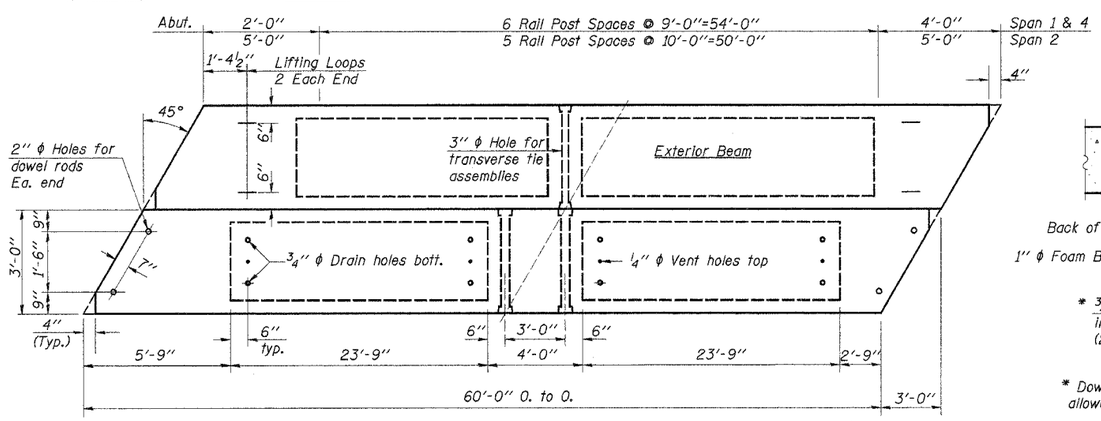

PLAN

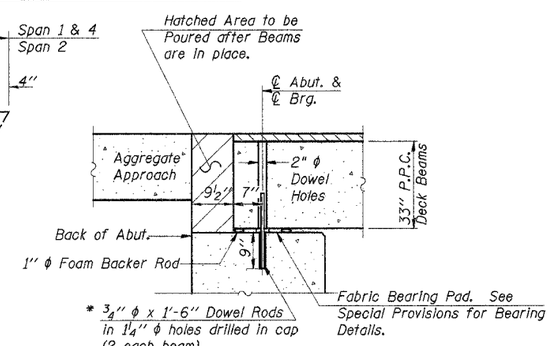

SEC. THRU ABUT.

* Dowel Rods to be grouted after beams are in place and allowed to cure (Min. 24 hrs.) prior to grouting the shear keys.

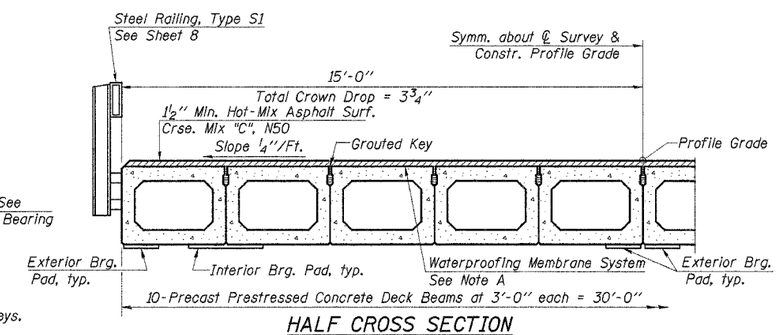

HALF CROSS SECTION

Note A:
The top surface of the beams shall be finished in accordance with article 504.06 of the Standard Specifications except that the surface shall be roughened by brooming. The finished surface shall be free of depressions or high spots with sharp corners, and the top edge of keys shall be rounded or chamfered a minimum of ¼"

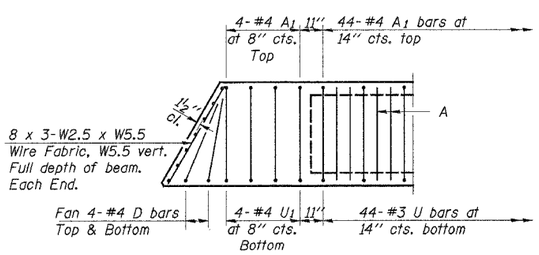

END PLAN

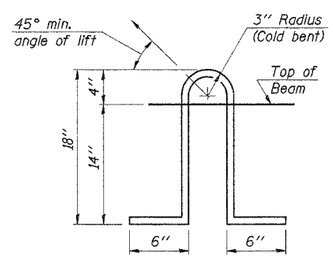

LIFTING LOOP DETAIL

NOTES

Prestressing steel shall be uncoated high strength, low relaxation 7-wire strand, Grade 270.
The nominal diameter shall be ½" and the nominal cross-sectional area shall be 0.153 sq. in.
Lifting loops shall be 3-½" ϕ-270 ksi strands, as shown.
The 1" ϕ rods in the transverse tie assembly shall be tightened to a snug fit and the threads set. Pockets that receive transverse tie bar on outside shall be filled with grout after transverse tie assembly is in place.
Non prestressing steel shall conform to AASHTO M-31 or M-322, Grade 60.
The bearing seat surfaces shall be adjusted by shimming to assure firm and even bearing. Two ⅛" fabric adjusting shims of the dimensions of the Exterior Bearing Pad shall be provided for each bearing.
Keyway surfaces shall be cleaned to remove form oil or other bond breaking material prior to shipment of the beams. Cleaning shall be done by sandblasting the keyway areas between top of the beam and the bottom edge of the key.
Corrosion Inhibitor, as covered in the Special Provisions, shall be used in the concrete for precast prestressed concrete deck beams.
Required Release Strength, f'ci, shall be 4,000 p.s.i.

BILL OF MATERIAL

Item	Unit	Quantity
Precast Prestressed Concrete Deck Beams (33" Depth)	Sq. Ft.	5,400
Hot-Mix Asphalt Surface Course, Mix "C", N50	Ton	89
Waterproofing Membrane System	Sq. Yd.	601
P.C. Mortar Fairing Course	Foot	810

Estimated Total Weight (One Beam) = 45,260 Pounds

DESIGNED	P.S.L.
CHECKED	S.F.M.
DRAWN	S.A.P. & J.P.S.
CHECKED	S.F.M.

PD-5-L 9-1-03

SUPERSTRUCTURE
SPANS 1, 2 & 4

SECTION 01-11126-00-BR
DOUGLAS ROAD DISTRICT
IROQUOIS COUNTY
STATION 14+69.94

4440 ASH GROVE
SPRINGFIELD, IL 62711
(217) 793-8600
www.fehr-graham.com

FEHR-GRAHAM & ASSOCIATES, LLC
ENGINEERING AND SCIENCE CONSULTANTS
FREEPORT, IL ROCKFORD, IL ROCHELLE, IL ROCKFORD, WI SPRINGFIELD, IL

JOB NO.: 46815
FILE: 0228SUPER.DGN
DATE: 11/06/06