GENERAL SHEET NOTES:

1. ALL POLES, ARMS, ETC. SHALL BE BLACK
2. USE BLACK STRAPPING TO ATTACH SIGNS TO POLES.
3. ALL NEW LIGHT FIXTURES AND POLES SHALL BE PROVIDED BY THE SAME MANUFACTURER.
4. PART NAMES AND MODEL NUMBERS SHOWN ASSUME HOLOPHANE AS MANUFACTURER. APPROVED EQUAL ACCEPTABLE.

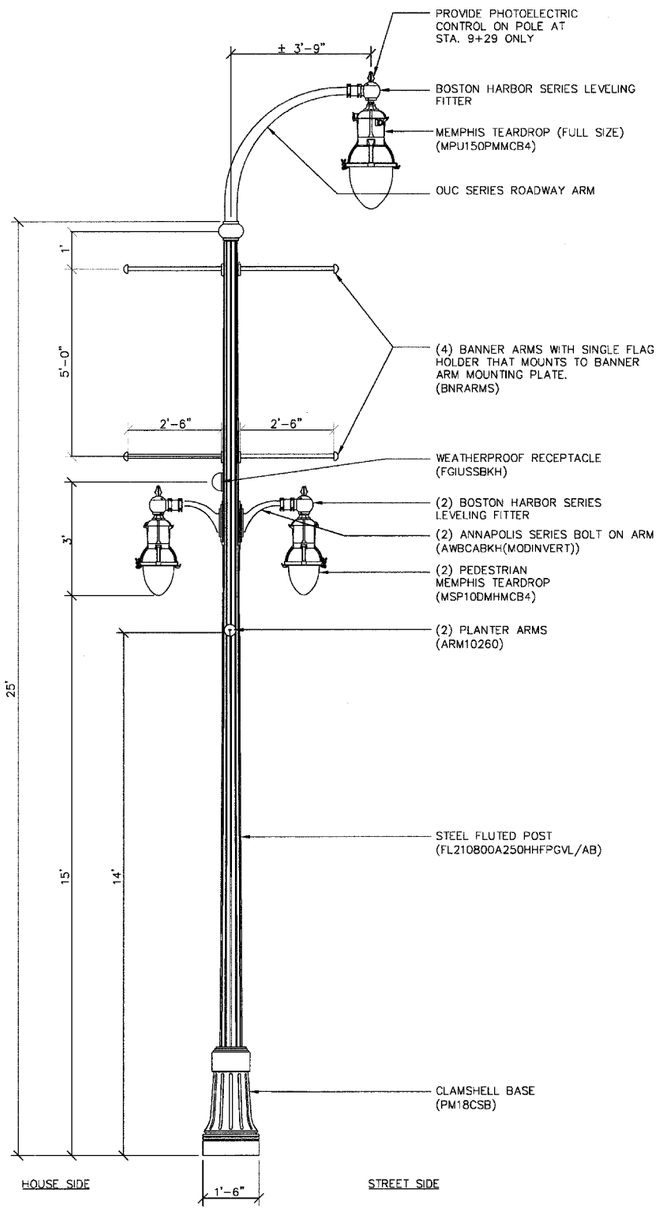

NOTE:
1. SHIP ONE (FPH1BOCABKH) FLAG POLE HOLDER WITH EACH POLE

DECORATIVE LIGHT – TYPE A

STATIONS: 7+77 RT, 8+56 LT, 9+29 RT, 10+29 LT, 11+13 RT, 11+97 LT, 12+81 RT, 13+65 LT, 14+49 RT, 15+33 LT, 16+17 RT — SCALE 1/2"=1'-0"

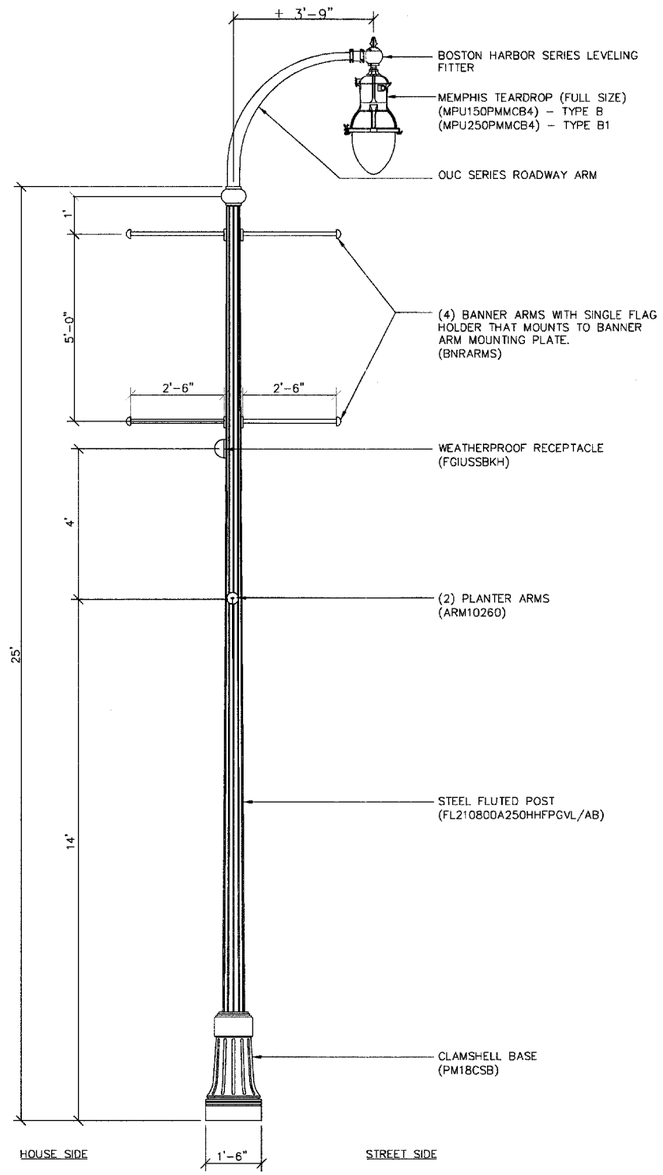

NOTE:
1. SHIP ONE (FPH1BOCABKH) FLAG POLE HOLDER WITH EACH POLE

DECORATIVE LIGHT – TYPE B, TYPE B1

STATIONS: 8+72 RT, 17+92 RT, 18+77 LT, 19+74 RT, 20+48 LT, 20+48 RT – TYPE B — SCALE 1/2"=1'-0"
STATIONS: 13+16 LT – TYPE B1

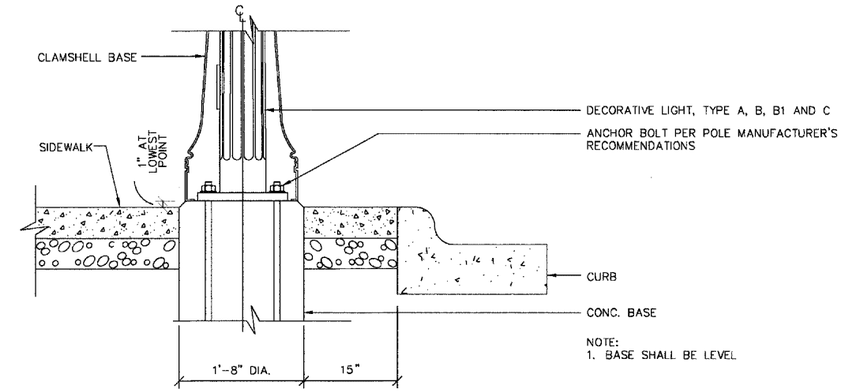

NOTE:
1. BASE SHALL BE LEVEL

CONCRETE LIGHT BASE

STATION — SCALE 1"=1'-0"

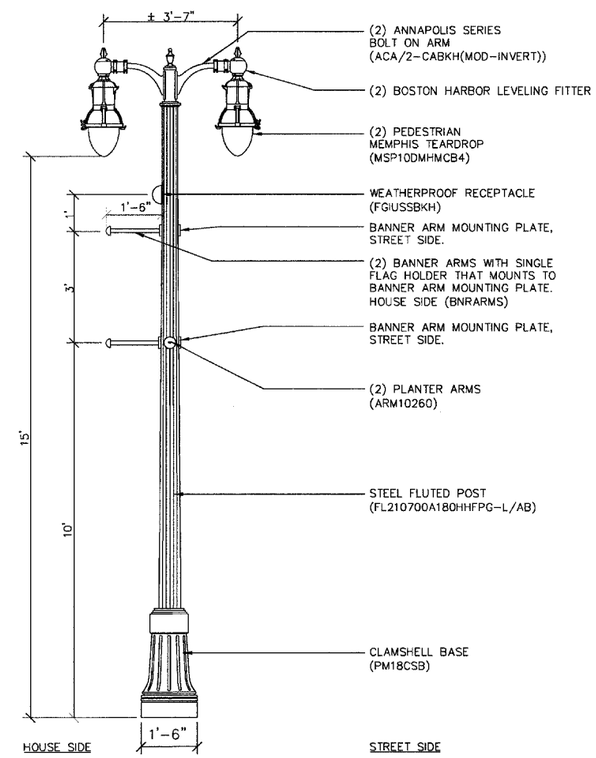

NOTE:
1. SHIP ONE (FPH1BOCABKH) FLAG POLE HOLDER WITH EACH POLE
2. PROVIDE (2) ADDITIONAL (BBRARMS) BREAKWAY BANNER ARMS WITH EACH POLE

DECORATIVE LIGHT – TYPE C

STATIONS: 6+90 RT, 7+77 LT, 8+56 RT, 9+45 LT, 10+29 RT, 11+04 LT, 11+97 RT, 12+58 LT, 13+65 RT, 14+49 LT, 15+33 RT, 16+17 LT — SCALE 1/2"=1'-0"

HANSON Hanson Professional Services Inc.

1	SAA	04/25/08	HUSSACOAH
2	SAA	04/25/08	DYN25\2008\25\PROJ\ACAD\PAVN\STRCT\SAA\P-D.DGN
3	CPS	04/30/08	N:\PS\06\25\PROJ\ACAD\PAVN\STRCT\SAA\P-D.DGN

FILE NAME =	USER NAME = SAA	DESIGNED – SAA	REVISED	STATE OF ILLINOIS DEPARTMENT OF TRANSPORTATION	LANDSCAPE DETAILS – DECORATIVE LIGHTING EAST LINCOLN HIGHWAY LIGHTING AND STREETSCAPE DEKALB, IL
F:\DESIGN\05H50A\CADD\Rdwy\Street\SAA\P-D.DGN		DRAWN – SAA	REVISED		
	PLOT SCALE = AS SHOWN	CHECKED – CPS	REVISED		SCALE: AS SHOWN · SHEET NO. OF SHEETS · STA. TO STA.
	PLOT DATE = 04\25\2008, 09:15 AM	DATE – 04/10/08	REVISED		

F.A.P. RTE.	SECTION	COUNTY	TOTAL SHEETS	SHEET NO.
567	06-00173-00-LI	DEKALB	41	26
		CONTRACT NO. 87337		
FAP 567	ILLINOIS	ITEP 32025		