ROUTE NO.	SECTION	COUNTY	TOTAL SHEETS	SHEET NO.
FAS 249	03-00190-00-BR	BUREAU	22	5
FED. ROAD DIST. NO. 7	ILLINOIS	FED. AID PROJECT- BRS-249(104)		

Contract No. 87365

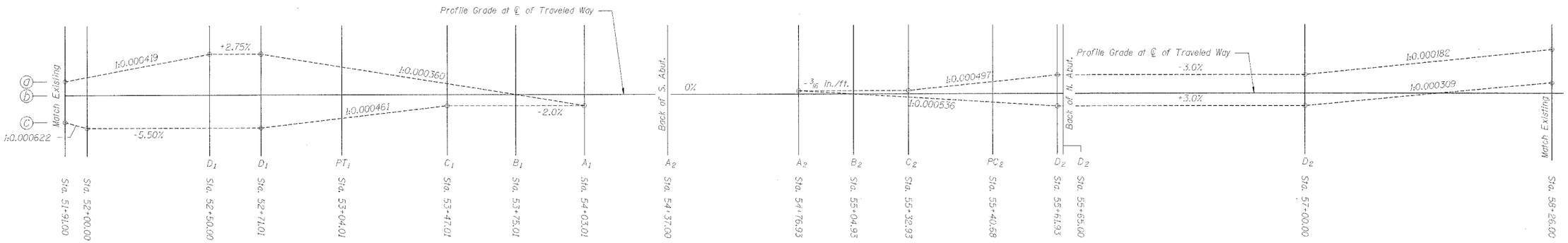

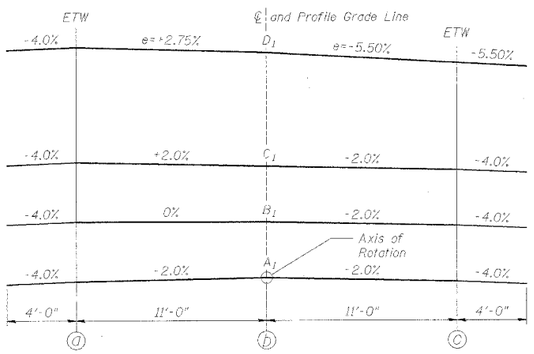

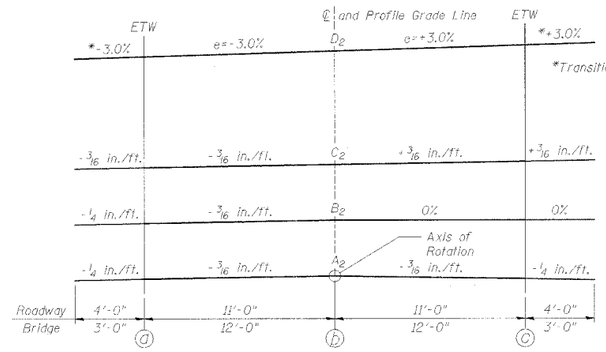

*Transition shoulders to -4% within Approach Pavement limits.

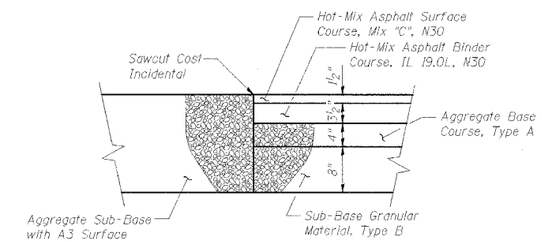

CORE JOINT DETAIL

PAVEMENT STRUCTURAL DESIGN (CONVENTIONAL FLEXIBLE) FAS 249 (C.H.17 – YANKEE LANE)

STRUCTURAL DESIGN TRAFFIC (S.D.T.) = YEAR 2018

CLASS III STREET

80,000 TRUCK DESIGN

P.V. 265
S.U. 50
M.U. 35
] 350 ADT

ASSUME ERI = 3 ksi
TF = 0.19
HMA MIX TEMP. 74° F
HMA E_{AC} = 600 ksi
HMA DESIGN STRAIN 235 microstrain

USE
1.5" HOT-MIX ASPHALT SURFACE COURSE, MIX "C", N30
3.5" HOT-MIX ASPHALT BINDER COURSE, IL 19.0L, N30
4" AGGREGATE BASE COURSE, TYPE A
8" SUB-BASE GRANULAR MATERIAL, TYPE B

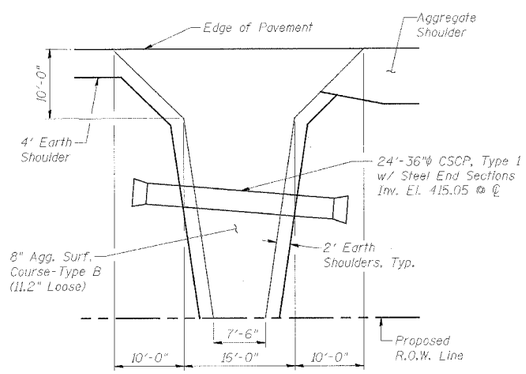

F.E.R. STA. 52+72

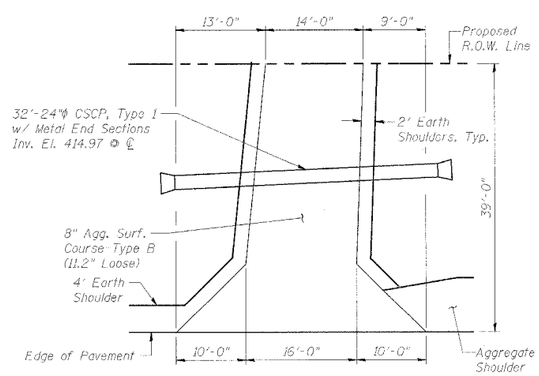

F.E.L. STA. 53+09

PAVEMENT MIXTURE REQUIREMENTS

RECONSTRUCTION

MIXTURE USE:	SURFACE	BINDER
PG:	PG 58-22	PG 58-22
RAP %: (MAX)	15	10
DESIGN AIR VOIDS	4.0 @ N30	4.0 @ N30
MIXTURE COMPOSITION (GRADATION MIXTURE)	IL 9.5 or IL 12.5	IL 19.0L
FRICTION AGGREGATE	C	N/A

Revised 6-9-08

ENTRANCE DETAILS & SUPERELEVATION DIAGRAMS
FAS 249 (C.H. 17 - YANKEE LANE) OVER CROW CREEK
SECTION 03-00190-00-BR
STA. 55+01 (S.N. 006-3231)
BUREAU COUNTY
PROJECT NO. BRS-249(104)

WHA # 1119D05