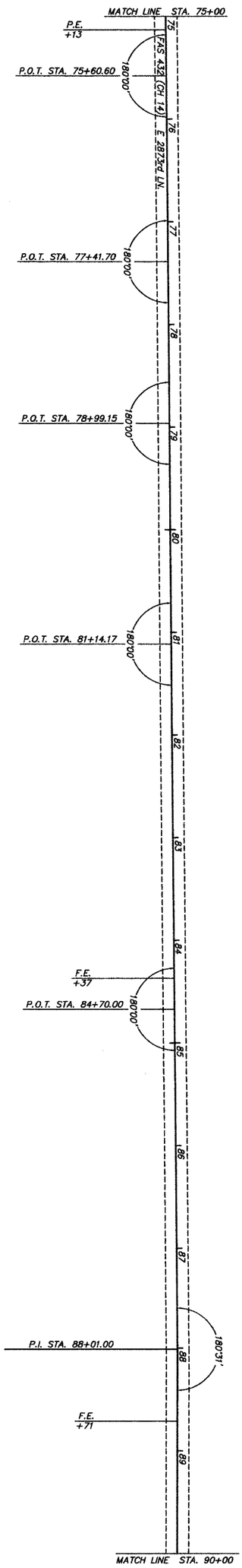

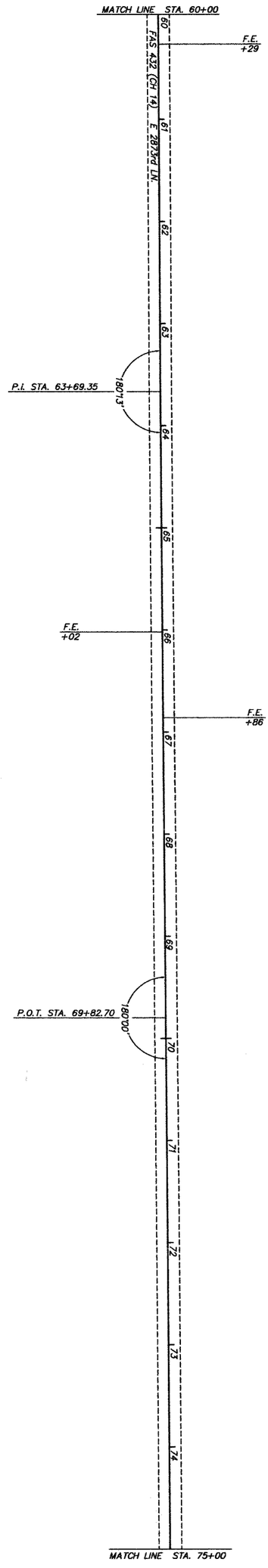

GRAPHIC SCALE IN FEET

50 0 50 100

COUNTY	ROUTE	SECTION	TOTAL SHEETS	SHEET NO.
ADAMS	FAS 432	08-00206-00-RS	11	6

STATION 60+00 TO STATION 90+00

PROJECT NO. RS-432(122)

98457