93462

ROUTE NO.	SECTION	COUNTY	TOTAL SHEETS	SHEET NO.
*	04-00001-00-BR	MACOUPIN	10	6
FED. ROAD DIST. NO. 7		ILLINOIS	FED. AID PROJECT-	

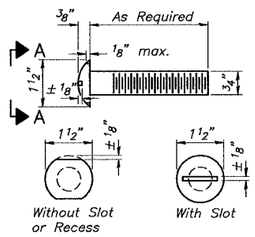

VIEW A–A
ROUND HEAD BOLT

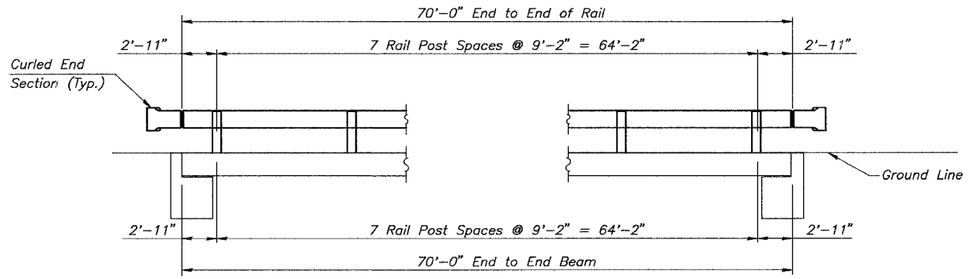

ELEVATION
Showing Inside Face of Rail

Note: Cost of Curled End Sections shall be considered incidental to the Steel Railing, Type S1.

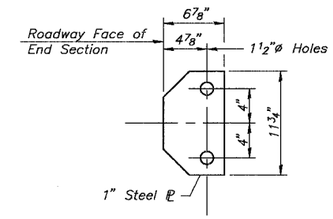

SECTION D–D

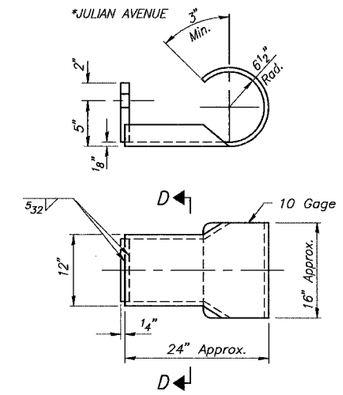

CURLED END SECTION DETAILS
(4 Required)

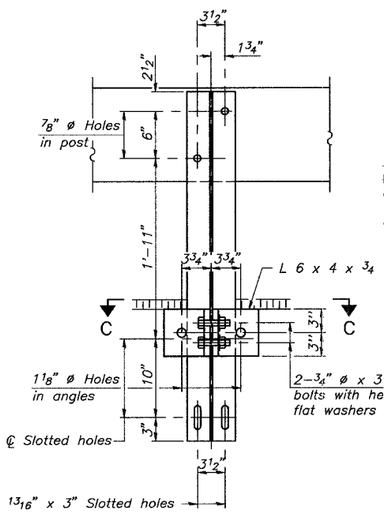

SECTION B–B

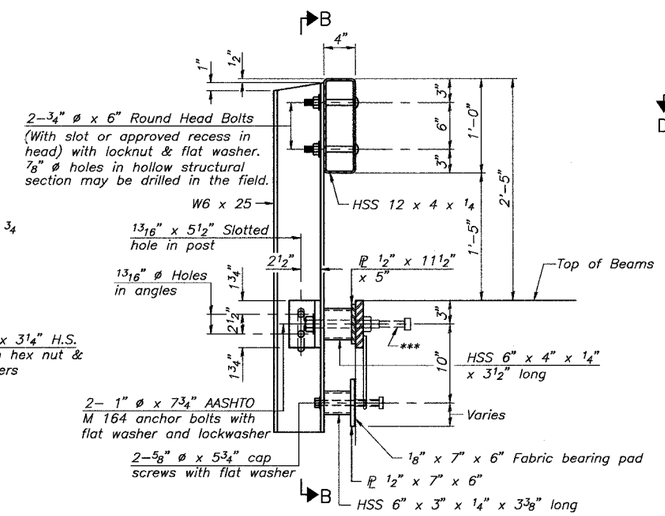

SECTION AT RAILING POST

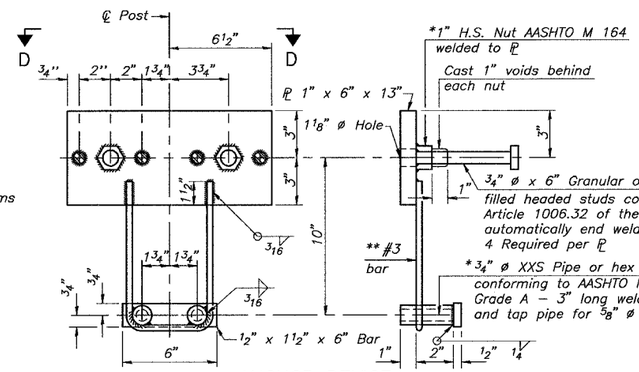

ANCHOR DEVICE
* Threaded areas shall be plugged or blocked off during casting of beam.

** Whenever the lower insert assemblies interfere with strand locations, the #3 bars shall be cut and adjusted in order to allow raising or lowering of the lower inserts. Maximum adjustment not to exceed 1/2".

Notes:
All field drilled holes shall be coated with an approved zinc rich point before erection.
For multi–span bridges, sufficient 1/4" x 6" x 1'-2" galvanized steel shims shall be provided to align rail between adjacent spans. Cost included with Steel Railing, Type S–1.
All steel rail elements shall be galvanized according to Article 509.05 of the Standard Specifications.
*** The studs of the anchor devices shall be placed below the top reinforcement bars and the outermost longitudinal reinforcement bar shall be placed directly above the studs of the rail post anchor device.
Curled End Sections shall conform to the requirements of AASHTO M 180 Type 1, Class A.

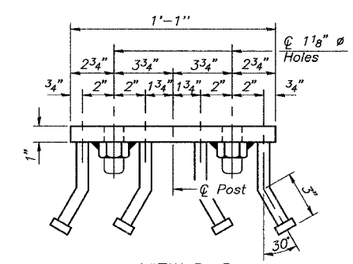

VIEW D–D

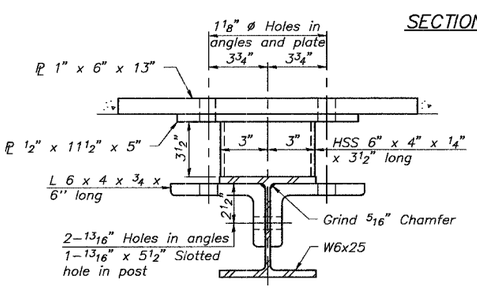

SECTION C–C

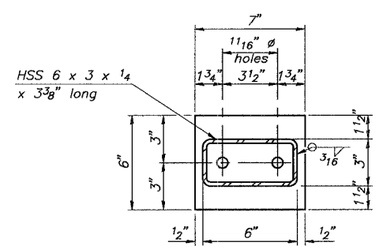

PL 1/2" x 7" x 6"

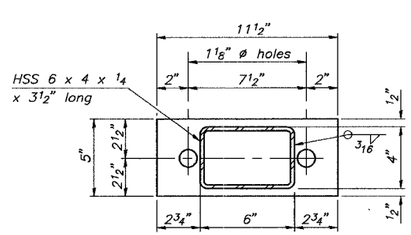

PL 1/2" x 11 1/2' x 5"

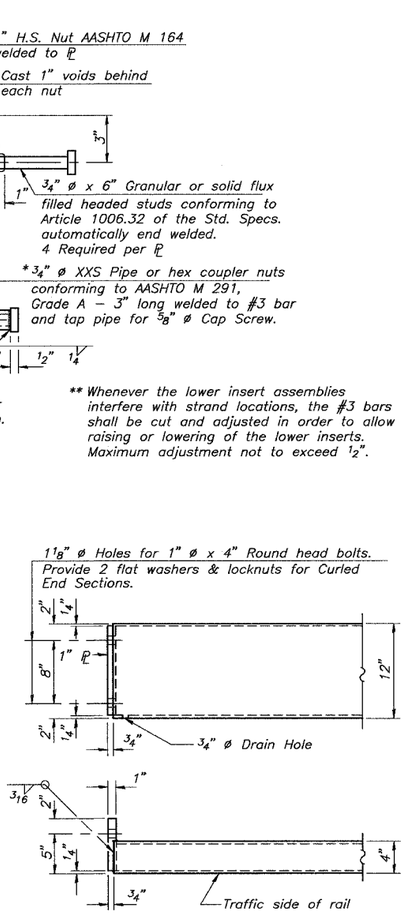

END OF RAIL DETAILS

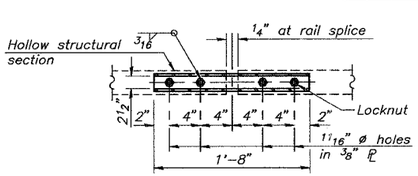

PLAN–BOTT. SPLICE PL
TYPICAL

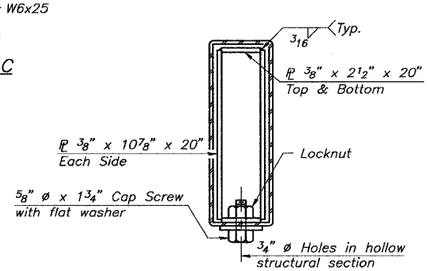

SECTIONS AT RAIL SPLICE

BILL OF MATERIAL

Item	Unit	Quantity
Steel Railing, Type S1	Foot	140

SHEET TITLE
STEEL RAILING, TYPE S1

PROJECT
SECTION 04–00001–00–BR
VILLAGE OF ROYAL LAKES
MACOUPIN COUNTY
STATION 9+93

PROJECT NO. 06012
SCALE
DATE 1–30–08
DRAWN BY PPW
CHECKED BY MRL
DRAWING NO. 6 OF 10 SHTS

COOMBE–BLOXDORF P.C.
Engineers / Land Surveyors
Springfield, Illinois
Design Firm License No. 184–002703