STATE OF ILLINOIS
DEPARTMENT OF TRANSPORTATION

ROUTE NO.	SECTION	COUNTY	TOTAL SHEETS	SHEET NO.
FAU 8985	103 B	MADISON	61	32A
FED. ROAD DIST. NO. 8	ILLINOIS	FED. AID PROJECT-		

SHEET NO. 2
3 SHEETS

Contract #97343

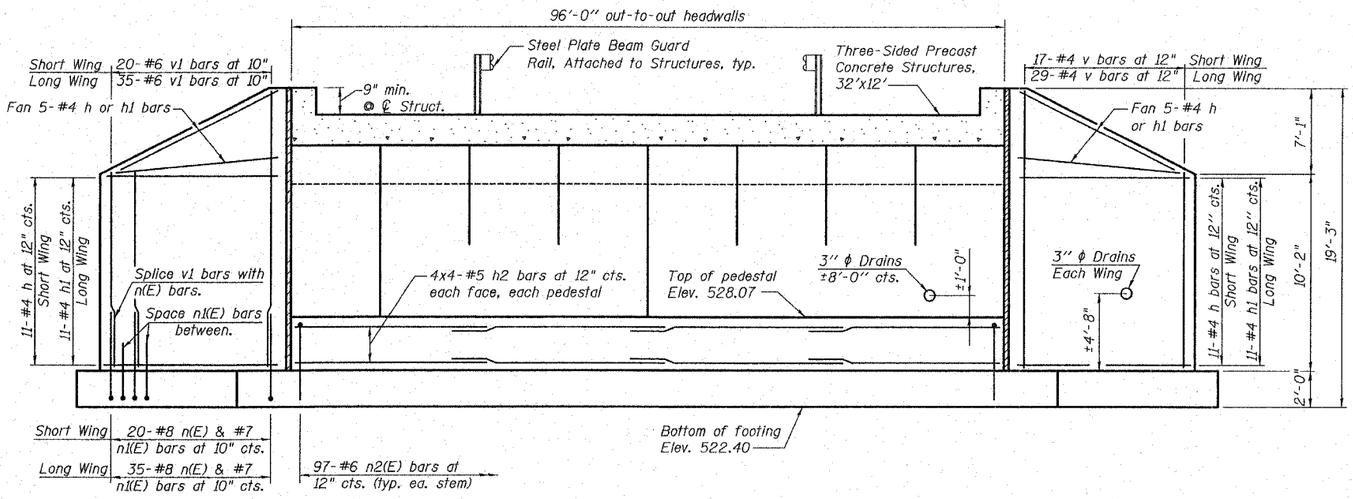

REINF.-BACK FACE

LONGITUDINAL SECTION

Dimensions along ℄ structure

REINF.-FRONT FACE

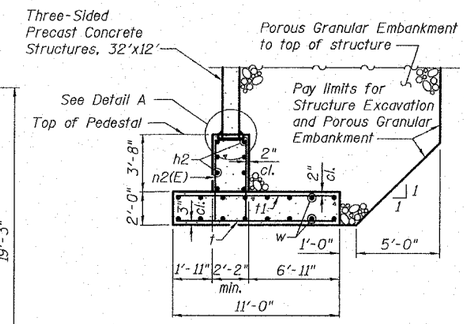

SECTION B-B

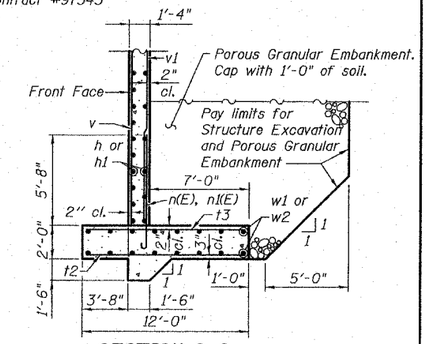

SECTION C-C

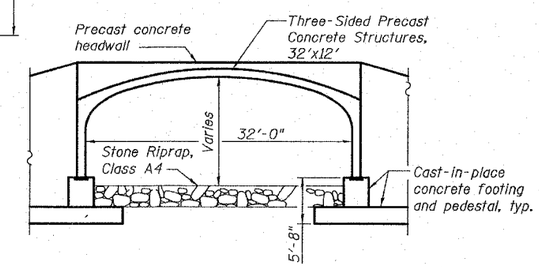

TYP. SECTION THRU STRUCTURE

(@ Rt. ∟'s to ℄ structure)

BILL OF MATERIAL

Bar	No.	Size	Length	Shape
h	64	#4	16'-2"	
h1	64	#4	28'-2"	
h2	64	#5	25'-9"	
n(E)	110	#8	8'-4"	
n1(E)	110	#7	4'-7"	
n2(E)	194	#6	11'-6"	
t	384	#8	10'-8"	
t1	258	#8	10'-8"	
t2	124	#5	11'-8"	
t3	124	#8	11'-8"	
v	46	#4	26'-9"	
v1	55	#6	26'-9"	
w	160	#5	25'-9"	
w1	44	#5	16'-2"	
w2	44	#5	28'-2"	
w3	4	#5	8'-0"	
w4	4	#5	8'-0"	
Concrete Structures			Cu. Yd.	347.1
Reinforcement Bars			Pound	36,700
Reinforcement Bars, Epoxy Coated			Pound	6,830

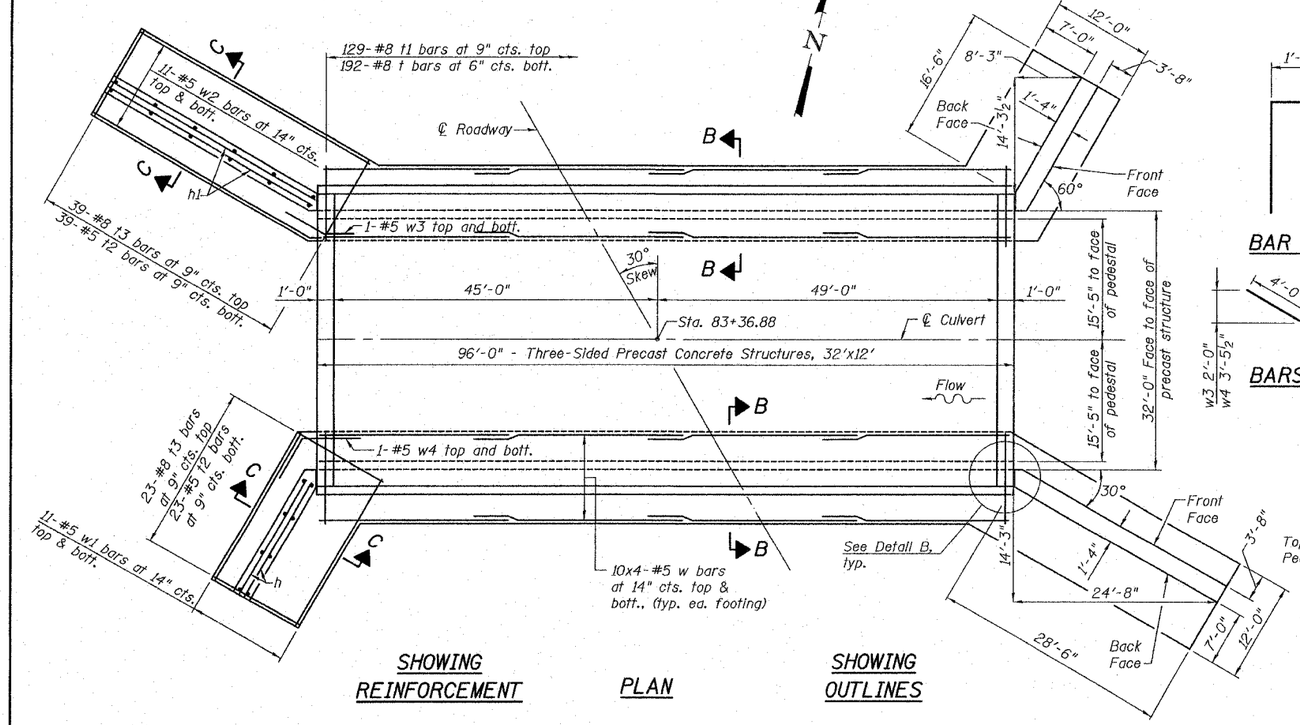

SHOWING REINFORCEMENT

PLAN

SHOWING OUTLINES

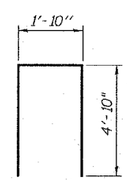

BAR n2(E)

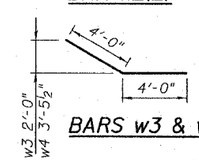

BARS w3 & w4

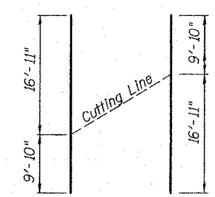

CUTTING DIAGRAM v & v1 BARS

Order v & v1 bars full length. Cut bars as shown and use half in the west and half in the east wingwalls.

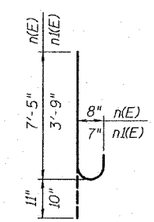

BARS n(E) & n1(E)

Notes:

1. Bars indicated thus 4x4-#5 etc. indicates 4 lines of bars with 4 lengths per line.
2. Reinforcement bars designated (E) shall be epoxy coated.
3. All edges shall have a standard ¾" chamfer.
4. Minimum lap length: #5 bar - 2'-5"
   #8 bar - 3'-8"
5. Dimensions B & T as specified by the Three-Sided Precast Concrete Structure manufacturer.

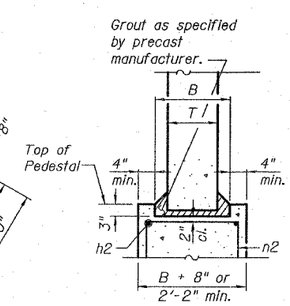

DETAIL A ⑤

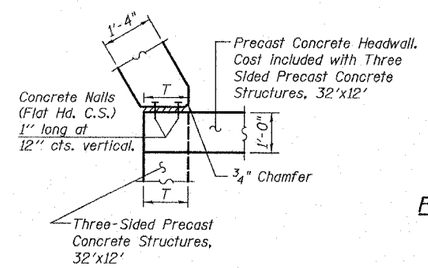

DETAIL B ⑤

PLAN AND DETAILS
PIERCE LANE OVER
ROCKY FORK CREEK
FAU 8985 - SECTION 103B
MADISON COUNTY
STA. 83+36.88
STRUCTURE NO. 060-6902