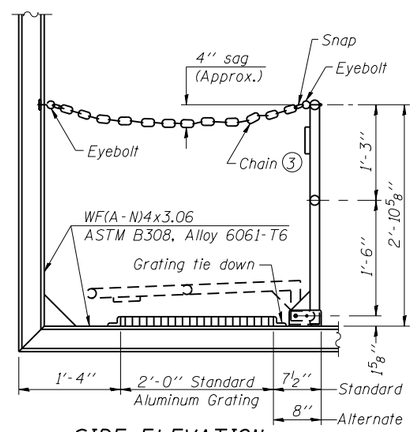

SIDE ELEVATION

(Showing safety chain w/o sign)

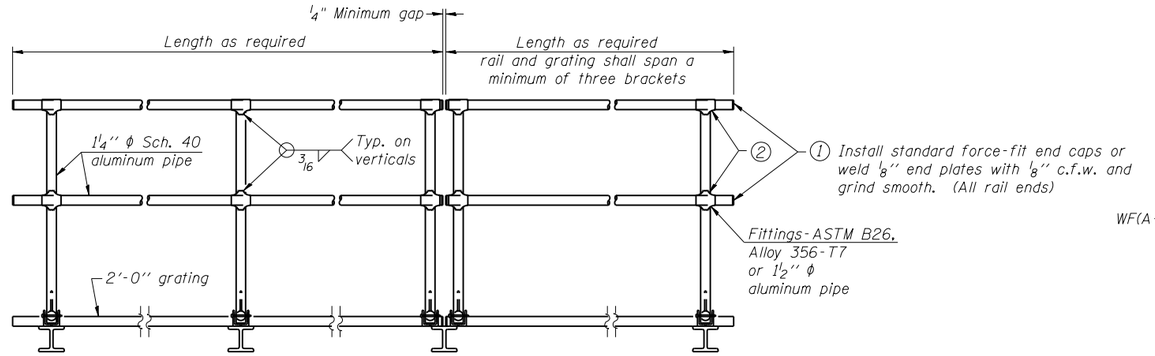

FRONT ELEVATION

(2) Horizontal handrail member shall be continuous thru fitting. Provide 7/16'' ϕ hole in fitting for 3/8'' ϕ bolt. Field drill 7/16'' ϕ hole in horizontal rail member. Provide locknut and two stainless steel washers for bolt. (Use 5/16'' eyebolts in 7/16''ϕ holes on top rail at ends only.)

HANDRAIL DETAILS

Handrail pipe shall be ASTM B241 or B429, Alloy 6063-T6 or Alloy 6061-T6.

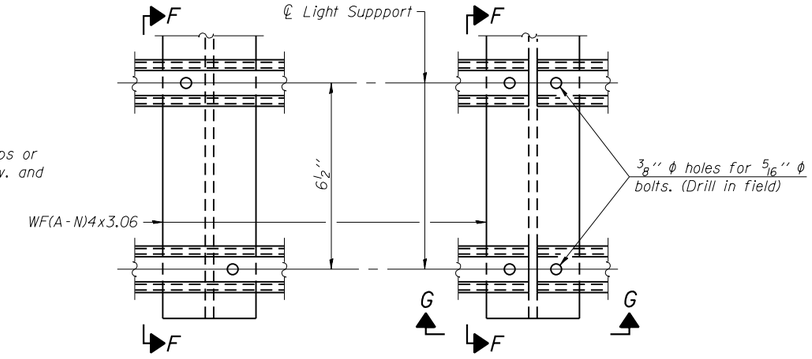

DETAIL F

DETAIL G

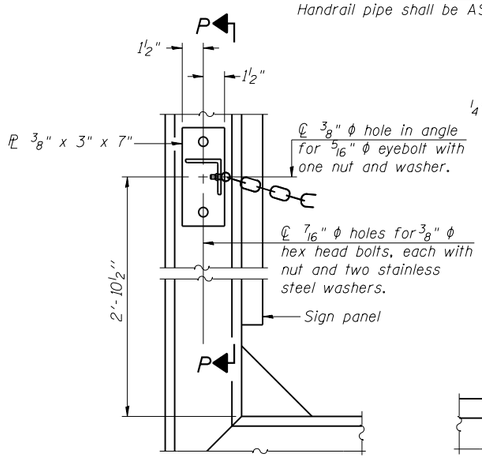

ALTERNATE SAFETY CHAIN ATTACHMENT

(With Sign Present)

Items not shown same as "Side Elevation" of "Handrail Details"

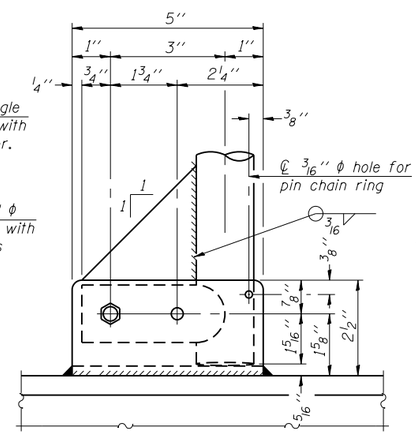

SIDE ELEVATION

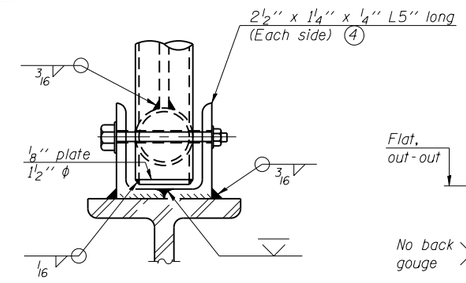

FRONT ELEVATION

See "Elevation" at right for dimensions.

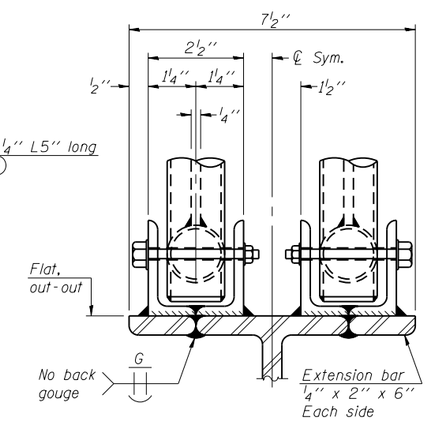

ELEVATION AT HANDRAIL JOINT (4)

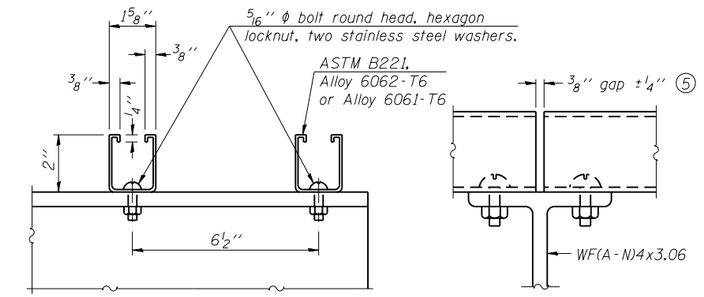

SECTION F-F

SECTION G-G

LIGHTING FIXTURE MOUNTS (IF REQUIRED)

(5) Field cut ends of light support channels shall be free of burrs or hazardous projections and coated with zinc-rich primer or equivalent.

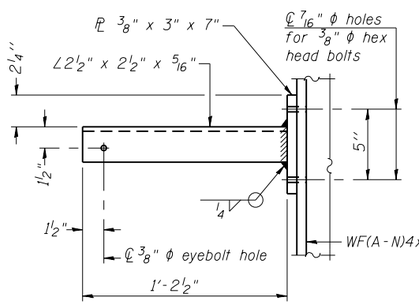

SECTION P-P

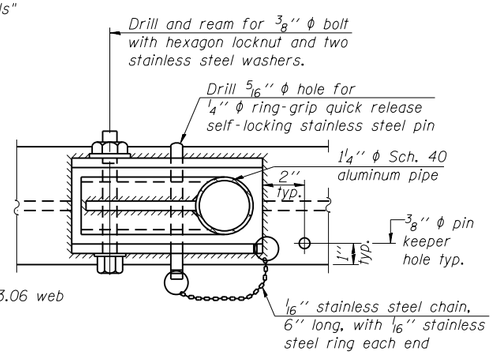

PLAN

DETAIL E HANDRAIL HINGE

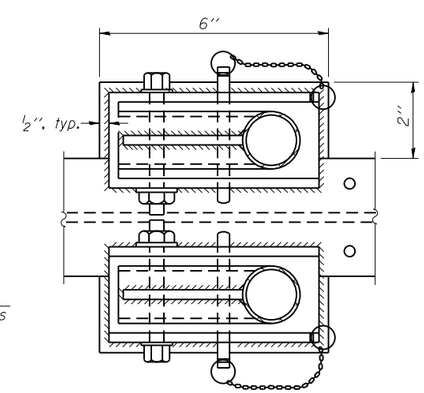

PLAN AT HANDRAIL JOINT

Details not shown same as "PLAN"

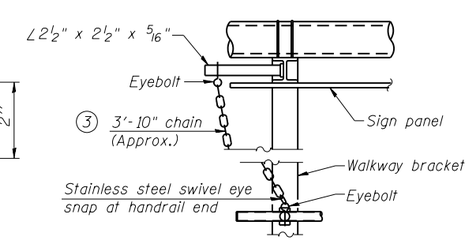

ALTERNATE SAFETY CHAIN ATTACHMENT

Details not shown similar to "Safety Chain" Details
(Walkway omitted for clarity)

(3) 3/16'' Type 304L stainless steel chain, approximately 12 links per foot.

(4) Extrusions may be used in lieu of the details shown, with approval of the Engineer.

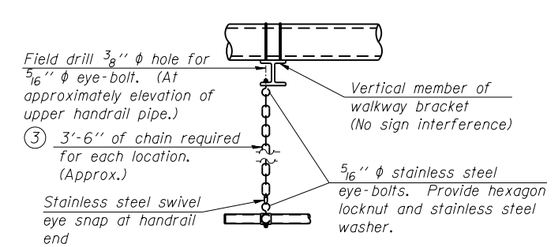

SAFETY CHAIN

One required for each end of each walkway.

OS-A-11 6-1-12

HBM ENGINEERING GROUP, LLC. CONSULTING & DESIGN INSPECTION & RATING RESEARCH & TESTING	4415 WEST HARRISON ST. SUITE 231 HILLSIDE, IL 60162 PHONE: (708) 236-0900 FAX: (708) 236-0901	USER NAME =	DESIGNED - JMG	REVISED -	STATE OF ILLINOIS DEPARTMENT OF TRANSPORTATION	OVERHEAD SIGN STRUCTURES ALUMINUM HANDRAIL DETAILS	F.A. RTE.	SECTION	COUNTY	TOTAL SHEETS	SHEET NO.
			CHECKED - JJS	REVISED -			VAR.	•	ROCK ISLAND	45	38
		PLOT SCALE =	DRAWN - AI	REVISED -			• D-2 OVD SIN STR REPL 14-26		CONTRACT NO. 46287		
		PLOT DATE = 3/12/2014	CHECKED - MAI	REVISED -		Sheet No. 9 of 11			ILLINOIS FED. AID PROJECT		