✳ PERMANENT TAPER LIMITS (NB & SB)

Sta. 442+05.9 to Sta. 442+55.5
Structure (Sta. 442+55.5 to Sta. 442+88.5)
Sta. 442+88.5 to Sta. 443+38.4

✳✳ HMA SURF. REMOVAL, VAR. DEPTH LIMITS (NB & SB)

Sta. 442+20.9 to Sta. 442+55.5
Structure (Sta. 442+55.5 to Sta. 442+88.5)
Sta. 442+88.5 to Sta. 443+23.4

SECTION B-B

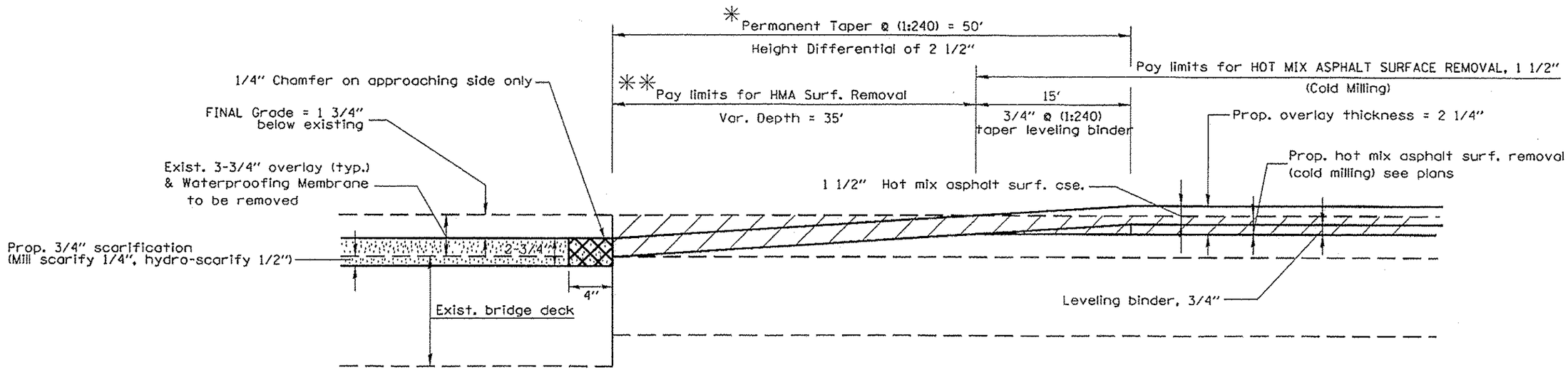

LEGEND

= HMA SURFACE REMOVAL (DECK), 3-3/4"
CONCRETE BRIDGE DECK SCARIFICAION, 3/4"

= LATEX MODIFIED CONCRETE, 2 3/4"

= POLYMER CONCRETE (DRIVING AND PASSING LANES ONLY)

FILE NAME = c:\pw_work\pwidot\russellsm\d0368330\D460865-sht-details.dgn	USER NAME = russellsm	DESIGNED -	REVISED -	STATE OF ILLINOIS DEPARTMENT OF TRANSPORTATION	BRIDGE DECK REPLACEMENT DETAIL SHEET 2 OF 2	F.A.U. RTE.	SECTION	COUNTY	TOTAL SHEETS	SHEET NO.
		DRAWN -	REVISED -			6791	126RS-4	KNOX	76	65
Default	PLOT SCALE = 100.0000 ' / in.	CHECKED - VAV	REVISED -					CONTRACT NO. 68B65		
	PLOT DATE = 5/2/2014	DATE -	REVISED -		SCALE: SHEET OF SHEETS STA. TO STA.			ILLINOIS FED. AID PROJECT		