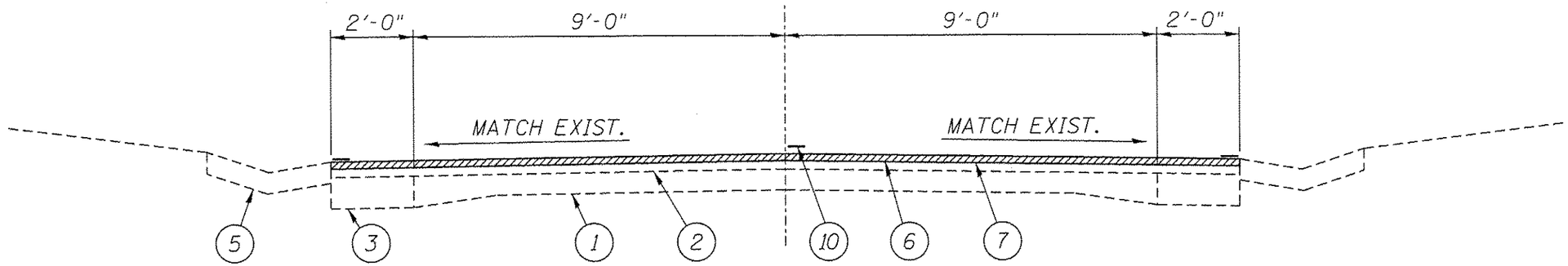

STA. 93+00 TO 94+00

LEGEND

1 - EXIST. P.C.C. PAVEMENT
2 - EXIST. HOT-MIX ASPHALT SURFACE
3 - EXIST. BASE COURSE WIDENING
4 - EXIST. AGGREGATE SHOULDERS
5 - EXIST. TYPE A GUTTER
6 - PROP. HOT-MIX ASPHALT SURFACE REMOVAL 2"
7 - PROP. HOT-MIX ASPHALT SURFACE COURSE, MIX C, N50 2"
8 - PROP. AGGREGATE SHOULDERS, TYPE B
9 - PROP. PAVEMENT REMOVAL
10 - PROP. PAINT PAVEMENT MARKING - LINE 5"
11 - PROP. HOT-MIX ASPHALT BASE COURSE WIDENING 9"
12 - PROP. GUTTER REMOVAL

FILE NAME = c:\pw_work\pwidot\sharptd\d0366886\D672567-sht-5-6-7-typical.dgn	USER NAME = sharptd	DESIGNED -	REVISED -	STATE OF ILLINOIS DEPARTMENT OF TRANSPORTATION	TYPICAL SECTION	S.B.I. RTE.	SECTION	COUNTY	TOTAL SHEETS	SHEET NO.
		DRAWN -	REVISED -			96	(123) RS-7	HANCOCK	8	6
	PLOT SCALE = 3.0000 ' / in.	CHECKED -	REVISED -					CONTRACT NO. 72G67		
SHT_PLAN	PLOT DATE = Mar-17-2014 10:26:03AM	DATE -	REVISED -		SCALE: SHEET . OF 1 SHEETS STA. TO STA.		ILLINOIS FED. AID PROJECT			