06-13-2025 LETTING ITEM 052

F.A.P RTE.	SECTION	COUNTY	TOTAL SHEETS	SHEET NO.
796	(106BR-2)BR	FORD	55	1
	ILLINOIS	CONTRACT NO. 66B58		

STATE OF ILLINOIS
DEPARTMENT OF TRANSPORTATION

P-93-023-09
D-93-065-24

PROPOSED HIGHWAY PLANS

FAP ROUTE 796 (IL 115)
SECTION: (106BR-2)BR
PROJECT: BR-8XAM(381)
BRIDGE REPLACEMENT
OVER N. FORK OF VERMILION RIVER TRIBUTARY
FORD COUNTY

C-93-103-24

INDEX OF SHEETS

FOR LIST OF STANDARDS, SEE SHEET NO. 2

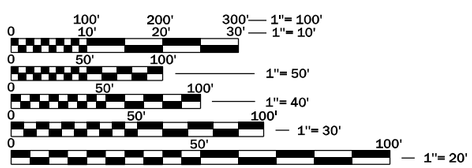

FULL SIZE PLANS HAVE BEEN PREPARED USING STANDARD ENGINEERING SCALES. REDUCED SIZED PLANS WILL NOT CONFORM TO STANDARD SCALES. IN MAKING MEASUREMENTS ON REDUCED PLANS, THE ABOVE SCALES MAY BE USED.

J.U.L.I.E.
JOINT UTILITY LOCATION INFORMATION FOR EXCAVATION
1–800–892–0123
OR 811

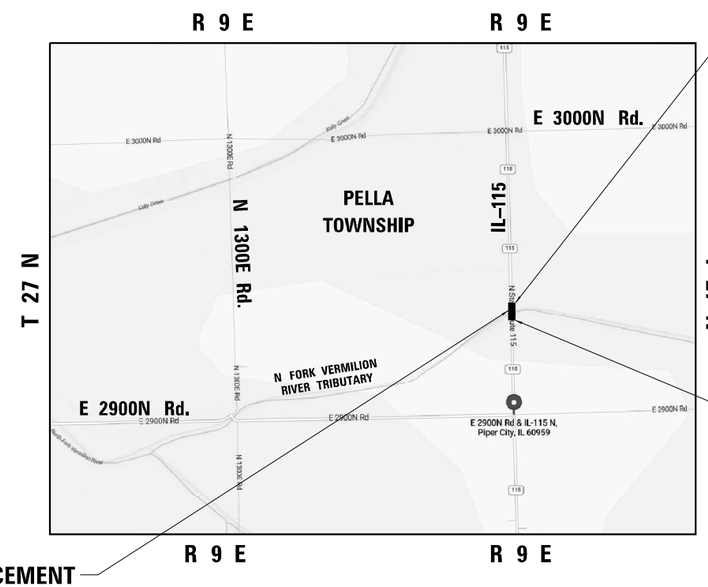

BEGIN IMPROVEMENTS
STA. 1661 + 00.00

END IMPROVEMENTS
STA. 1670 + 00.00

BRIDGE REPLACEMENT
STA. 1665 + 79.00
EXIST SN 027–0074
PROP SN 027–0105

LOCATION MAP
NOT TO SCALE

GROSS LENGTH = 900 FT. = 0.17 MILES
NET LENGTH = 900 FT. = 0.17 MILES

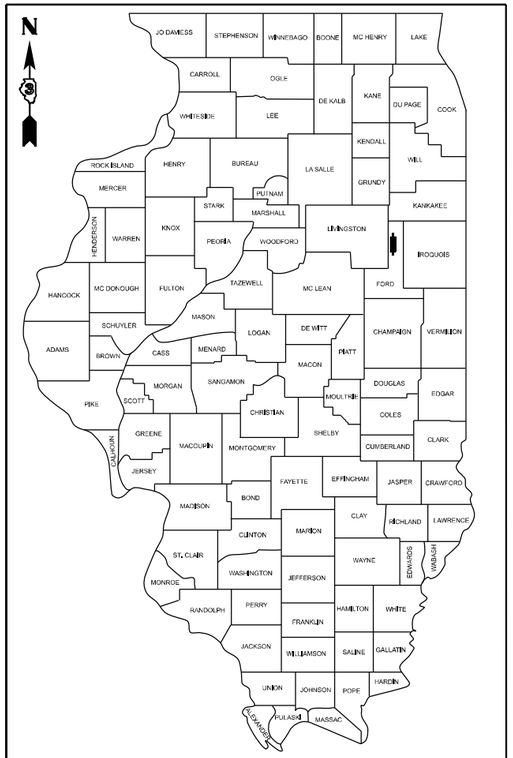

LOCATION OF SECTION INDICATED THUS: -

N

LOCATION MAP
NOT TO SCALE

FUNCTIONAL CLASSIFICATION
RURAL MINOR COLLECTOR
2023 ADT = 950
P.V. = 83% S.U. = 4% M.U. = 13%

STATE OF ILLINOIS
DEPARTMENT OF TRANSPORTATION

SUBMITTED March 26, 2025
Trisha Thompson
MS REGIONAL ENGINEER

May 9, 2025
ENGINEER OF DESIGN AND ENVIRONMENT

May 9, 2025
DIRECTOR OF HIGHWAYS PROJECT IMPLEMENTATION

BRAD H. SAYERS
081-006267
LICENSED STRUCTURAL ENGINEER OF ILLINOIS

BRAD H. SAYERS, P.E.
IL. LIC. SE NO. 081–006267
EXP: 11 /30 /2026
DATE: 02 /24 /2025
THIS SEAL AND SIGNATURE PERTAINS TO SHEETS 27–46.

LICENSED PROFESSIONAL ENGINEER
MUTHAYAB AHMED MOHAMMED
062-072419
OF ILLINOIS

MUTHAYAB AHMED MOHAMMED, P.E.
IL. LIC. NO. 062–072419
EXP: 11 /30 /2026
DATE: 02 /24 /2025
THIS SEAL AND SIGNATURE PERTAINS TO SHEETS 1–26, 47–55

PROJECT ENGINEER: DAVE ALEXANDER, P.E.
UNIT CHIEF: MOHAMED YOUSIF
DISTRICT 3 NO. (815) 434–6131
CONTRACT NO. 66B58

PRINTED BY THE AUTHORITY OF THE STATE OF ILLINOIS

REV. 4/10/25

GENERAL NOTES:

1. BEFORE ORDERING PIPE CULVERTS OR PIPE DRAINS, THE CONTRACTOR SHALL CONSULT THE ENGINEER FOR EXACT LENGTHS.

2. THE FOLLOWING RATES OF APPLICATION HAVE BEEN USED IN CALCULATING PLAN QUANTITIES.

GRANULAR MATERIALS	2.05	TON/CU YD
HMA RESURFACING	112	LBS/SQ YD/IN
POROUS GRANULAR EMBANKMENT	2.0	TON/CU YD
MIX FOR CRACKS, JTS & FLGWYS	0.0003	TON/SQ YD
TACK COAT	0.025	LB/SQFT
PRIME COAT	0.25	LB/SQFT

3. THE FINISHED EARTHWORK SHALL HAVE A VEGETATION SUSTAINING SOIL COVERING THE TOP FOUR INCHES (100 MILLIMETERS) IN AREAS TO BE SEEDED OR SODDED. THE VEGETATION SUSTAINING SOIL REQUIRED WILL NOT BE PAID FOR SEPARATELY BUT WILL BE INCLUDED IN THE COST OF FURNISHED EXCAVATION.

4. THE AREA TO BE SEEDED SHALL CONSIST OF ALL DISTURBED EARTH SURFACES WITHIN THE RIGHT OF WAY OR AS DIRECTED BY THE ENGINEER.

   SEEDING CLASS 2A = 1.0 ACRES

5. THE ENGINEER WILL BE THE SOLE JUDGE CONCERNING CURING TIME FOR THE VARIOUS HMA LIFTS.

6. EXCEPT AS NOTED ON THE PLANS, PAVEMENT GRADES SHOWN ARE AT THE TOP OF PAVEMENT SURFACES.

7. ALL EXCAVATED MATERIAL, WHICH INCLUDES DIGGING OR GRADING OF ANY SOIL OR FILL MATERIAL, WITH THE EXCEPTION OF AGGREGATE FILLS, MUST BE INCORPORATED WITHIN THE IDOT RIGHT OF WAY.

8. ALL ELEVATIONS REFERRING TO U.S.G.S. MEAN SEA LEVEL DATUM.

9. MEMBERS OF JULIE KNOWN TO BE WITHIN THE LIMITS OF THE IMPROVEMENT ARE:

   VERIZON - AERIAL

10. NON-MEMBERS OF JULIE KNOWN TO BE WITHIN THE LIMITS OF THE IMPROVEMENT ARE:

    NONE

HMA MIXTURE REQUIREMENT TABLE

LOCATION(S):	ENTIRE PROJECT	ENTIRE PROJECT	ENTIRE PROJECT	ENTIRE PROJECT
MIXTURE USE(S):	HMA	HMA	HMA SHOULDER	HMA SHOULDER
	SURFACE	BINDER	TOP LIFT	BOTTOM LIFT(S)
BINDER GRADE (PG):	PG 64-22	PG 64-22	PG 64-22	PG 64-22
DESIGN AIR VOIDS:	4.0% @ N50	4.0% @ N50	4.0% @ N50	4.0% @ N50
MIXTURE COMPOSITION:	IL 9.5	IL 19.0	IL 9.5	IL 19.0
FRICTION AGGREGATE:	MIXTURE C	NA	MIXTURE C	NA
MIXTURE WEIGHT:	112.0 LBS/SY/IN	112.0 LBS/SY/IN	112.0 LBS/SY/IN	112.0 LBS/SY/IN
QUALITY MANAGEMENT PROGRAM:	QCQA	QCQA	QCQA	QCQA
SUBLOT SIZE:	NA	NA	NA	NA
DENSITY TEST METHOD:	CORES/NUCLEAR	CORES/NUCLEAR	CORES/NUCLEAR	CORES/NUCLEAR

LIST OF ILLINOIS DOT HIGHWAY STANDARDS

000001-08	STANDARD SYMBOLS, ABBREVIATIONS AND PATTERNS
001001-02	AREAS OF REINFORCEMENT BARS
001006	DECIMAL OF AN INCH AND OF A FOOT
280001-07	TEMPORARY EROSION CONTROL SYSTEMS
420401-13	PAVEMENT CONNECTOR (PCC) FOR BRIDGE APPROACH SLAB
482001-02	HMA SHOULDER ADJACENT TO FLEXIBLE PAVEMENT
515001-04	NAME PLATE FOR BRIDGES
542401-04	METAL FLARED END SECTION FOR PIPE CULVERT
601101-02	CONCRETE HEADWALL FOR PIPE UNDERDRAINS
630001-13	STEEL PLATE BEAM GUARDRAIL
630201-07	PCC/HMA STABILIZATION AT STEEL PLATE BEAM GUARDRAIL
630301-09	SHOULDER WIDENING FOR TYPE 1 (SPECIAL) GUARDRAIL TERMINALS
642006-01	SHOULDER RUMBLE STRIPS, 8 INCH
666001-01	RIGHT-OF-WAY MARKERS
701001-02	OFF-ROAD OPERATIONS, 2L, 2W, MORE THAN 15' (4.5 M) AWAY
701006-05	OFF-ROAD OPERATIONS 2L,2W, 15' TO 24" FROM PAVEMENT EDGE
701201-05	LANE CLOSURE, 2L, 2W, DAY ONLY, FOR SPEEDS >= 45 MPH
701311-03	LANE CLOSURE, 2L, 2W, MOVING OPERATIONS - DAY ONLY
701901-10	TRAFFIC CONTROL DEVICES
725001-01	OBJECT AND TERMINAL MARKERS
780001-05	TYPICAL PAVEMENT MARKINGS
781001-04	TYPICAL APPLICATIONS RAISED REFLECTIVE PAVEMENT MARKERS

LIST OF BUREAU OF LOCAL ROADS HIGHWAY STANDARDS

B.L.R.21-9	TYPICAL APPLICATION OF TRAFFIC CONTROL DEVICES FOR CONSTRUCTION ON RURAL LOCAL HIGHWAYS

BRAD H. SAYERS
081-006267
LICENSED
STRUCTURAL
ENGINEER
OF
ILLINOIS

BRAD H. SAYERS, P.E.
IL. LIC. SE NO. 081-006267

EXP: 11 /30 /2026

DATE: 02 /24 /2025

THIS SEAL AND SIGNATURE PERTAINS TO SHEETS 27-46.

LICENSED PROFESSIONAL ENGINEER
MUTHAYAB
AHMED
MOHAMMED
062-072419
OF ILLINOIS

MUTHAYAB AHMED MOHAMMED, P.E.
IL. LIC. NO. 062-072419

EXP: 11 /30 /2026

DATE: 02 /24 /2025

THIS SEAL AND SIGNATURE PERTAINS TO SHEETS 1-26, 47-55

STATE OF ILLINOIS
DEPARTMENT OF TRANSPORTATION
DISTRICT THREE
AS BUILT INFORMATION

SUPERVISING CONSTRUCTION FIELD ENGINEER

RESIDENT ENGINEER / TECHNICIAN

START & END DATES OF CONSTRUCTION:

INSPECTORS:

MODEL: Default
FILE NAME: Z:\Shared\Projects\IDOT\IDOT-003-A00403_Design\02_CADD Sheets\WO#01392858-sht-notes.dgn

OSEH inc. 332 W. VAN BUREN STREET SUITE 400 CHICAGO, IL 60607 WWW.OSEHINC.COM

USER NAME = Aslinal\Andrew	DESIGNED - AA	REVISED -	
	DRAWN - AA	REVISED -	
PLOT SCALE = 100.0000 ' / in.	CHECKED - MM	REVISED -	
PLOT DATE = 2/24/2025	DATE - 2/24/2025	REVISED -	

STATE OF ILLINOIS
DEPARTMENT OF TRANSPORTATION

IL ROUTE 115
INDEX OF SHEETS, STATE STANDARDS AND GENERAL NOTES

SCALE: SHEET 1 OF 1 SHEETS STA. TO STA.

F.A.P RTE.	SECTION	COUNTY	TOTAL SHEETS	SHEET NO.
796	(106BR-2)BR	FORD	55	2

CONTRACT NO. 66B58

ILLINOIS FED. AID PROJECT

SUMMARY OF QUANTITIES

PAY ITEM NUMBER	DESIGNATION	UNIT	TOTAL QUANTITY	CONSTRUCTION CODE 010 80% FEDERAL 20% STATE BRIDGE S. NO. (PR) 027-0105
20200100	EARTH EXCAVATION	CU YD	1,427	1,427
20300100	CHANNEL EXCAVATION	CU YD	123	123
20400800	FURNISHED EXCAVATION	CU YD	1,224	1,224
25000210	SEEDING, CLASS 2A	ACRE	1	1
25000400	NITROGEN FERTILIZER NUTRIENT	POUND	96	96
25000500	PHOSPHORUS FERTILIZER NUTRIENT	POUND	96	96
25000600	POTASSIUM FERTILIZER NUTRIENT	POUND	96	96
25100630	EROSION CONTROL BLANKET	SQ YD	4,688	4,688
28000250	TEMPORARY EROSION CONTROL SEEDING	POUND	97	97
28000305	TEMPORARY DITCH CHECKS	FOOT	102	102
28000400	PERIMETER EROSION BARRIER	FOOT	1,693	1,693
28001100	TEMPORARY EROSION CONTROL BLANKET	SQ YD	4,688	4,688
28100107	STONE RIPRAP, CLASS A4	SQ YD	798	798
28200200	FILTER FABRIC	SQ YD	798	798
35100110	AGGREGATE BASE COURSE, TYPE A	CU YD	437	437

* SPECIALTY ITEM

SUMMARY OF QUANTITIES

PAY ITEM NUMBER	DESIGNATION	UNIT	TOTAL QUANTITY	CONSTRUCTION CODE 010 80% FEDERAL 20% STATE BRIDGE S. NO. (PR) 027-0105
40600275	BITUMINOUS MATERIALS (PRIME COAT)	POUND	4,138	4,138
40600290	BITUMINOUS MATERIALS (TACK COAT)	POUND	857	857
40600370	LONGITUDINAL JOINT SEALANT	FOOT	718	718
40600400	MIXTURE FOR CRACKS, JOINTS, AND FLANGEWAYS	TON	6	6
40600982	HOT-MIX ASPHALT SURFACE REMOVAL - BUTT JOINT	SQ YD	318	318
40603080	HOT-MIX ASPHALT BINDER COURSE, IL-19.0, N50	TON	552	552
40604050	HOT-MIX ASPHALT SURFACE COURSE, IL-9.5, MIX "C", N50	TON	204	204
42000080	PAVEMENT CONNECTOR (PCC) FOR BRIDGE APPROACH SLAB	SQ YD	192	192
44000100	PAVEMENT REMOVAL	SQ YD	1,004	1,004
44000157	HOT-MIX ASPHALT SURFACE REMOVAL, 2"	SQ YD	741	741
44004250	PAVED SHOULDER REMOVAL	SQ YD	621	621
48203029	HOT-MIX ASPHALT SHOULDERS, 8"	SQ YD	1,266	1,266
50100100	REMOVAL OF EXISTING STRUCTURES	EACH	1	1
50105220	PIPE CULVERT REMOVAL	FOOT	166	166
50200100	STRUCTURE EXCAVATION	CU YD	158	158

* SPECIALTY ITEM

SUMMARY OF QUANTITIES

PAY ITEM NUMBER	DESIGNATION	UNIT	TOTAL QUANTITY	CONSTRUCTION CODE 010 80% FEDERAL 20% STATE BRIDGE S. NO. (PR) 027-0105
50300225	CONCRETE STRUCTURES	CU YD	71.9	71.9
50300255	CONCRETE SUPERSTRUCTURE	CU YD	125.5	125.5
50300260	BRIDGE DECK GROOVING	SQ YD	453	453
50300300	PROTECTIVE COAT	SQ YD	579	579
50301350	CONCRETE SUPERSTRUCTURE (APPROACH SLAB)	CU YD	97.2	97.2
50401315	FURNISHING AND ERECTING PRECAST PRESTRESSED CONCRETE BEAMS, IL36N	FOOT	448.5	448.5
50800205	REINFORCEMENT BARS, EPOXY COATED	POUND	72,060	72,060
51200959	FURNISHING METAL SHELL PILES 14" X 0.312"	FOOT	310	310
51202305	DRIVING PILES	FOOT	310	310
51203200	TEST PILE METAL SHELLS	EACH	2	2
51204650	PILE SHOES	EACH	12	12
51500100	NAME PLATES	EACH	1	1
54213471	END SECTIONS 36"	EACH	4	4
542D0241	PIPE CULVERTS, CLASS D, TYPE 1 36"	FOOT	209	209
58600101	GRANULAR BACKFILL FOR STRUCTURES	CU YD	131	131

* SPECIALTY ITEM

SUMMARY OF QUANTITIES

	PAY ITEM NUMBER	DESIGNATION	UNIT	TOTAL QUANTITY	CONSTRUCTION CODE 010 80% FEDERAL 20% STATE BRIDGE S. NO. (PR) 027-0105
	59100100	GEOCOMPOSITE WALL DRAIN	SQ YD	78	78
	60100060	CONCRETE HEADWALLS FOR PIPE DRAINS	EACH	4	4
	60146304	PIPE UNDERDRAINS FOR STRUCTURES 4"	FOOT	124	124
	60801036	FLAP GATE 36"	EACH	4	4
*	63000001	STEEL PLATE BEAM GUARDRAIL, TYPE A, 6 FOOT POSTS	FOOT	312.5	312.5
*	63100045	TRAFFIC BARRIER TERMINAL, TYPE 2	EACH	2	2
*	63100085	TRAFFIC BARRIER TERMINAL, TYPE 6	EACH	4	4
*	63100167	TRAFFIC BARRIER TERMINAL, TYPE 1 (SPECIAL) TANGENT	EACH	2	2
	63200310	GUARDRAIL REMOVAL	FOOT	558	558
	64200108	SHOULDER RUMBLE STRIPS, 8 INCH	FOOT	1,438	1,438
	66600105	FURNISHING AND ERECTING RIGHT OF WAY MARKERS	EACH	10	10
	67000400	ENGINEER'S FIELD OFFICE, TYPE A	CAL MO	10	10
	67100100	MOBILIZATION	L SUM	1	1
*	72501000	TERMINAL MARKER - DIRECT APPLIED	EACH	4	4
*	78008210	POLYUREA PAVEMENT MARKING TYPE I - LINE 4"	FOOT	728	728

* SPECIALTY ITEM

MODEL: Default
FILE NAME: Z:\Shared\Projects\IDOT\IDOT-00\00\03_Design\02_CADD Sheets\W0#6\D3#6B59-sht-SQ04.dgn

SUMMARY OF QUANTITIES

	PAY ITEM NUMBER	DESIGNATION	UNIT	TOTAL QUANTITY	CONSTRUCTION CODE 010 80% FEDERAL 20% STATE BRIDGE S. NO. (PR) 027-0105
*	78008230	POLYUREA PAVEMENT MARKING TYPE I - LINE 6"	FOOT	91	91
*	78009004	MODIFIED URETHANE PAVEMENT MARKING - LINE 4"	FOOT	2,872	2,872
*	78009006	MODIFIED URETHANE PAVEMENT MARKING - LINE 6"	FOOT	359	359
*	78100100	RAISED REFLECTIVE PAVEMENT MARKER	EACH	11	11
*	78200005	GUARDRAIL REFLECTORS, TYPE A	EACH	6	6
	78300200	RAISED REFLECTIVE PAVEMENT MARKER REMOVAL	EACH	11	11
	X5080530	BAR TERMINATORS	EACH	408	408
	X6350204	LINEAR DELINEATOR PANELS, 4 INCH	EACH	25	25
	X6350206	LINEAR DELINEATOR PANELS, 6 INCH	EACH	6	6
	X7010216	TRAFFIC CONTROL AND PROTECTION, (SPECIAL)	L SUM	1	1
	X7200061	TEMPORARY INFORMATION SIGNING	SQ FT	67	67
	Z0013798	CONSTRUCTION LAYOUT	L SUM	1	1
	Z0023201	SEDIMENT CONTROL, SILT CURTAIN	EACH	2	2

* SPECIALTY ITEM

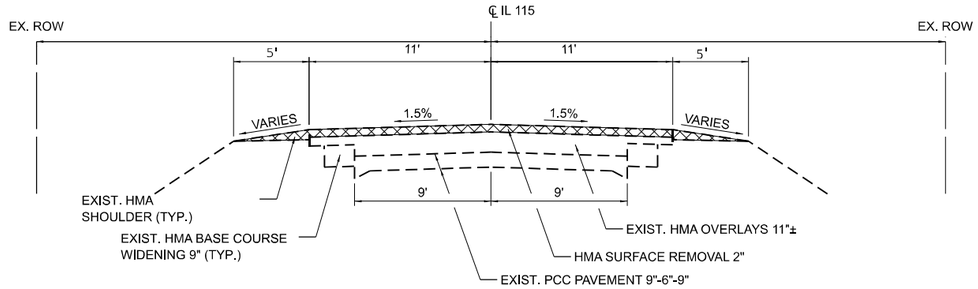

EXISTING ROADWAY TYPICAL SECTION

* VARIABEL DEPTH MILLING
VARIES FROM 2" TO ¾"
STA 1661+60 TO STA 1662+35
STA 1668+37 TO STA 1669+30

STA 1661+00 TO STA 1663+27
STA 1668+37 TO STA 1670+00

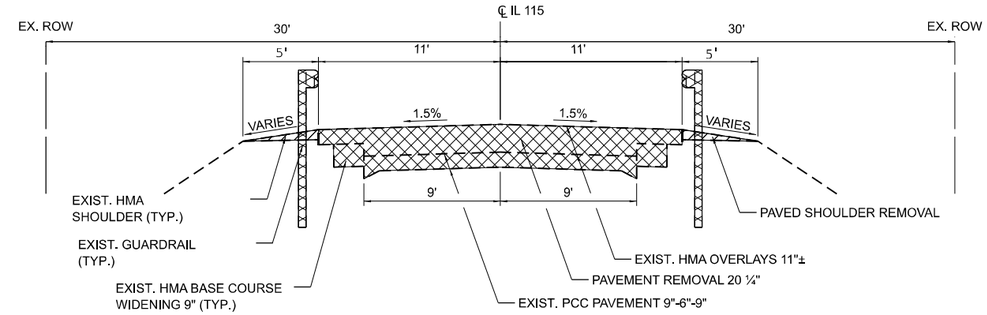

EXISTING ROADWAY TYPICAL SECTION

STA 1663+27 TO STA 1665+11
STA 1666+47 TO STA 1668+37

GUADRAIL REMOVAL
LT STA. 1664+95 TO STA. 1665+39
RT STA. 1664+04 TO STA. 1665+56
LT STA. 1666+06 TO STA. 1667+57
RT STA. 1666+21 TO STA. 1667+48

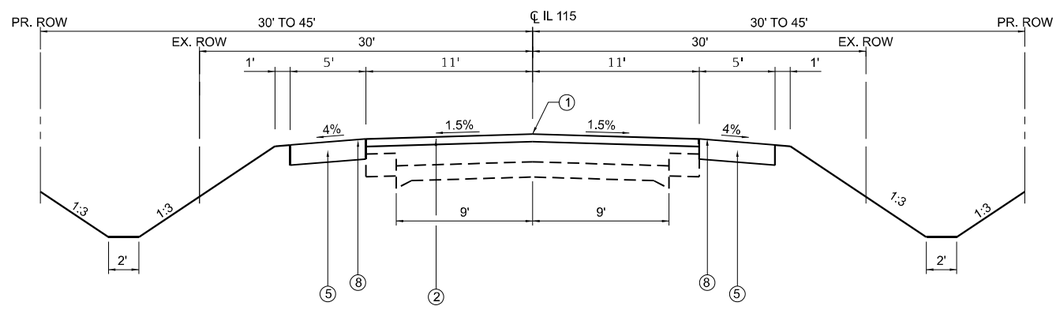

PROPOSED ROADWAY TYPICAL SECTION

STA 1661+00 TO STA 1662+35
STA 1669+30 TO STA 1670+00

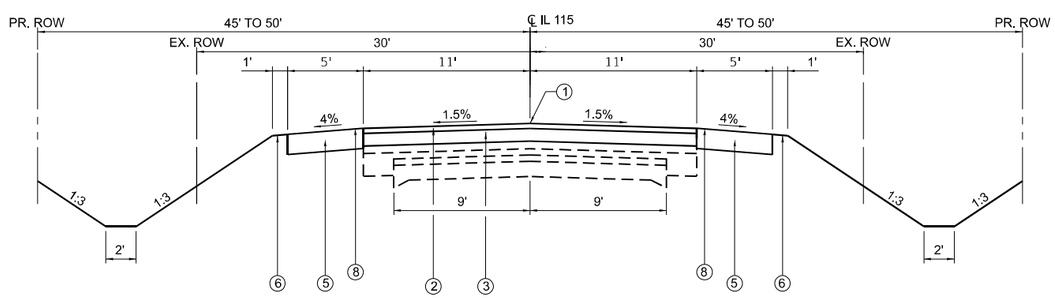

PROPOSED ROADWAY TYPICAL SECTION

STA. 1662+35 TO STA. 1663+27
STA. 1668+37 TO STA. 1669+30

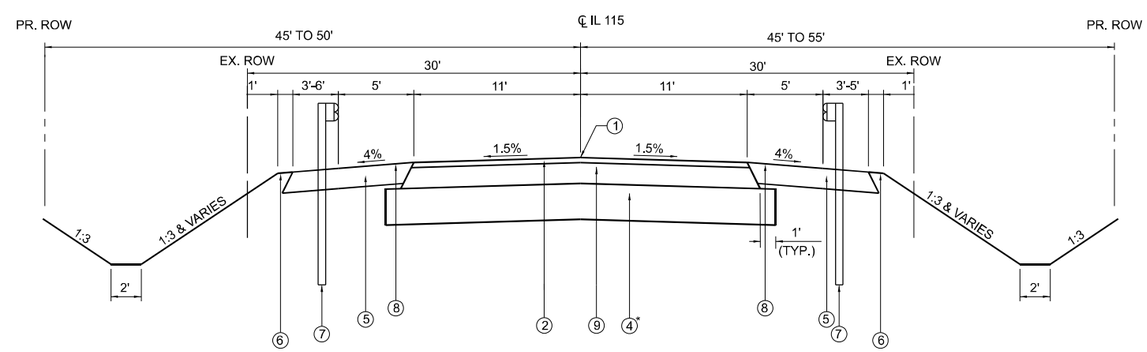

PROPOSED ROADWAY TYPICAL SECTION

STA 1663+27 TO STA 1664+88
STA 1666+70 TO STA 1668+37

* AGGREGATE BASE COURSE, TYPE A,
VARIES FROM 17" TO 0"
STA. 1663+27 TO STA. 1663+97
STA. 1667+69 TO STA. 1668+37

PROPOSED GUARDRAIL
LT STA. 1663+80.9 TO STA. 1665+18.4
RT STA. 1662+84.1 TO STA. 1665+34.1
LT STA. 1666+23.9 TO STA. 1668+11.4
RT STA. 1666+39.6 TO STA. 1667+27.1

LEGEND

1. LONGITUDINAL JOINT SEALANT
2. HOT-MIX ASPHALT SURFACE COURSE, IL-9.5, MIX C, N50, 2"
3. HOT-MIX ASPHALT BINDER COURSE, IL-19.0, N50. VARIES 2 ¼" TO 8¼"
4. AGGREGATE BASE COURSE, TYPE A, VARIES 17"
5. HOT-MIX ASPHALT SHOULDER, 8"
6. EARTH SHELF, 1' WIDE
7. STEEL PLATE BEAM GUARDRAIL, TYPE A 6' POST
8. SHOULDER RUMBLE STRIP 8"
9. HOT-MIX ASPHALT BINDER COURSE, IL-19.0, N50, 8¼"

MODEL: Default
FILE NAME: Z:\Shared\Projects\IDOT\IDOT-003-A00403_Design\02_CADD Sheets\WO#03\96858-sht-typical.dgn

OSEH inc. 310 W. VAN BUREN STREET SUITE 400 CHICAGO, IL 60607 WWW.OSEI-INC.COM

USER NAME = AslinaIAndrew	DESIGNED - AA	REVISED -	
	DRAWN - AA	REVISED -	
PLOT SCALE = 10.000 ' / in.	CHECKED - MM	REVISED -	
PLOT DATE = 2/24/2025	DATE - 2/24/2025	REVISED -	

STATE OF ILLINOIS
DEPARTMENT OF TRANSPORTATION

IL ROUTE 115
TYPICAL SECTIONS

SCALE: SHEET 1 OF 1 SHEETS STA. TO STA.

F.A.P RTE.	SECTION	COUNTY	TOTAL SHEETS	SHEET NO.
796	(106BR-2)BR	FORD	55	8

CONTRACT NO. 66B58

ILLINOIS | FED. AID PROJECT

PAVEMENT AND SHOULDERS												
LOCATION	OFFSET	LENGTH	PCC CONNECTOR	AGG BASE CSE A	HMA BINDER CSE, IL-19.0, N50	HMA SURF CSE, MIX "C", N50	BIT MAT (PRIME COAT)	BIT MAT (TACK COAT)	MIX CR, JTS, FLGWY	HMA SHLDR 8"	LONGITUDINAL JOINT SEALANT	SHOULDER RUMBLE STRIPS, 8"
	(LT/RT)	(FT)	(SQ YD)	(CU YD)	(TON)	(TON)	(POUND)	(POUND)	(TON)	(SQ YD)	(FT)	(FT)
STA 1661+00 TO STA 1662+50	LT/RT	150		437	552	204	4,138	857	6	326	150	300
STA 1662+50 TO STA 1664+88	LT/RT	238								367	238	480
STA 1666+70 TO STA 1668+00	LT/RT	130								301	130	258
STA 1668+00 TO STA 1670+00	LT/RT	200								272	200	400
STA 1664+88 TO STA 1665+11	LT/RT		96									
STA 1666+47 TO 1666+70	LT/RT		96									
TOTAL			192	437	552	204	4,138	857	6	1,266	718	1,438

REMOVAL OF PAVING MATERIALS					
LOCATION	OFFSET	PAVED SHLDR REM	HOT-MIX ASPHALT SURFACE REMOVAL - BUTT JOINT	PAVEMENT REMOVAL	HOT-MIX ASPHALT SURFACE REMOVAL 2"
	(LT/RT)	(SQ YD)	(SQ YD)	(SQ YD)	(SQ YD)
STA 1661+00 TO STA. 1661+60	LT/RT		159		
STA 1661+60 TO STA 1663+27	LT/RT				443
STA 1663+27 TO STA 1665+13.58	LT/RT			504	
STA 1666+47.08 TO STA 1668+37	LT/RT			500	
STA 1666+70 TO STA 1668+37	LT/RT				297
STA 1669+40 TO STA 1670+00	LT/RT		159		
STA 1661+00 TO STA. 1665+13.58	LT/RT	296			
STA 1666+47.08 TO STA 1670+00	LT/RT	325			
TOTAL		621	318	1,004	741

ROADSIDE ITEMS										
LOCATION	OFFSET	GUARDRAIL REMOVAL	STEEL PLATE BEAM GUARDRAIL, TYPE A, 6 FOOT POSTS	TRAFFIC BARRIER TERMINAL, TYPE 1 (SPECIAL) TANGENT	TRAFFIC BARRIER TERMINAL, TYPE 2	TRAFFIC BARRIER TERMINAL, TYPE 6	GUARDRAIL REFLECTORS, TYPE A	FURNISHING AND ERECTING RIGHT OF WAY MARKERS	LINEAR DELINEATOR PANELS 4"	LINEAR DELINEATOR PANELS 6"
	(LT/RT)	(FT)	(FT)	(EACH)	(EACH)	(EACH)	(EACH)	(EACH)	(EACH)	(EACH)
STA 1660+50	LT/RT							2		
STA 1663+00	RT							1		
STA 1663+84.1 TO STA 1663+34.1	RT			1						
STA 1663+50	LT							1		
STA 1663+34.1 TO STA 1664+96.6	RT		162.5				3		13	
STA 1663+80.9 TO 1664+30.9	LT				1					
STA 1664+30.9 TO 1664+80.9	LT		50				1		4	
STA 1664+80.9 TO STA 1665+18.4	LT					1				
STA 1664+96.6 TO STA 1665+34.10	RT					1				
STA 1666+13.79	RT							1		
STA 1666+20.54	RT							1		
STA 1666+23.9 TO STA 1666+61.4	LT					1				
STA 1667+00	RT							1		
STA 1667+61.4 TO STA 1668+11.4	LT			1						
STA 1666+39.6 TO STA 1666+77.1	RT					1				
STA 1666+61.4 TO STA 1667+61.4	LT		100				2		8	
STA 1666+77.1 TO STA 1667+27.1	RT				1					
STA 1667+50	LT							1		
STA 1670+50	LT/RT							2		
STA 1665+18 TO 1666+24	LT/RT									6
STA 1664+13 TO 1665+40	LT	127								
STA 1664+04 TO 1665+52	RT	152								
STA 1668+08 TO 1667+57	LT	152								
STA 1666+21 TO 1667+48	RT	127								
TOTAL		558	312.5	2	2	4	6	10	25	6

MODEL: Default
FILE NAME: Z:\Shared\Projects\IDOT\D07-203-000003_Design\02_CADD Sheets\WO#\D3656858-sht-schedules 1.dgn

OSEH inc. 950 W. JAN SURIEN STREET SUITE 023 CHICAGO, IL 60607 WWW.OSEHINC.COM

USER NAME = AsinatiAndrew	DESIGNED - AA	REVISED -
	DRAWN - AA	REVISED -
PLOT SCALE = 100.103 ' / in.	CHECKED - MM	REVISED -
PLOT DATE = 2/24/2025	DATE - 2/24/2025	REVISED -

STATE OF ILLINOIS
DEPARTMENT OF TRANSPORTATION

IL ROUTE 115
SCHEDULE OF QUANTITIES

SCALE: | SHEET 1 OF 3 SHEETS | STA. | TO STA.

F.A.P RTE.	SECTION	COUNTY	TOTAL SHEETS	SHEET NO.
796	(160BR-2)ES	FORD	55	9
		CONTRACT NO. 66B58		
	ILLINOIS	FED. AID PROJECT		

LANDSCAPING AND EROSION CONTROL												
LOCATION	OFFSET	SEEDING, CLASS 2A	NITROGEN FERTILIZER NUTRIENT	PHOSPHORUS FERTILIZER NUTRIENT	POTASSIUM FERTILIZER NUTRIENT	EROSION CONTROL BLANKET	PERIMETER EROSION BARRIER	STONE RIPRAP, CLASS A4	FILTER FABRIC	TEMPORARY EROSION CONTROL SEEDING	TEMPORARY EROSION CONTROL BLANKET	TEMPORARY DITCH CHECKS
	(LT/RT)	(ACRE)	(LBS)	(LBS)	(LBS)	(SQ YD)	(FT)	(SQ YD)	(SQ YD)	(POUND)	(SQ YD)	(FT)
STA 1661+00 TO STA 1665+41.34	LT	0.24	24	24	24	1,165	445			24	1,165	30
STA 1661+00 TO STA 1665+81.07	RT	0.25	25	25	25	1,204	452	798	798	25	1,204	30
STA 1666+83.12 TO STA 1670+00	LT	0.24	24	24	24	1,171	419			24	1,171	24
STA 1666+27.36 TO STA 1670+00	RT	0.24	23	23	23	1,148	377			24	1,148	18
TOTAL		1.0	96	96	96	4,688	1,693	798	798	97	4,688	102

PAVEMENT MARKINGS							
LOCATION	OFFSET	MODIFIED URETHANE PAVEMENT MARKING - LINE 4" (WHITE)	POLYUREA TYPE I PAVEMENT MARKING - LINE 4" (WHITE)	MODIFIED URETHANE PAVEMENT MARKING - LINE 6" (YELLOW SKIP DASH LINE)	POLYUREA TYPE I PAVEMENT MARKING - LINE 6" (YELLOW SKIP DASH LINE)	RAISED REFLECTIVE PAVEMENT MARKER	RAISED REFLECTIVE PAVEMENT MARKER REMOVAL
	(LT/RT)	(FT)		(FT)		(EACH)	(EACH)
STA 1661+00 TO STA 1662+50	LT/RT	600		75		2	2
STA 1662+50 TO STA 1664+88	LT/RT	952		119		3	3
STA STA 1664+88 TO STA 1666+70	LT/RT		728		91	2	2
STA 1666+70 TO STA 1668+00	LT/RT	520		65		2	2
STA 1668+00 TO STA 1670+00	LT/RT	800		100		3	3
TOTAL		2,872	728	359	91	11	11

NOTE: THE QUANTITIES FOR MODIFIED URETHANE PAVEMENT MARKING - LINE 4" (WHITE) AND MODIFIED URETHANE PAVEMENT MARKING - LINE 6" (YELLOW SKIP DASH LINE) REPRESENT TWO SEPARATE APPLICATIONS.

CULVERT SCHEDULE							
FROM		TO		P CUL CL D 1 36"	END SECTIONS 36"	PIPE CULVERT REMOVAL	FLAP GATE 36"
STATION	OFFSET	STATION	OFFSET	(FOOT)	EACH	(FOOT)	(EACH)
1664+95	27.71 LT	1655+44	29.72 LT			48	
1665+36	29.74 RT	1665+77	29.56 RT			40	
1665+88	28.09 LT	1666+32	30.75 LT			44	
1666+18	30.68 RT	1666+49	25.02 RT			34	
1664+90	38.4 LT	1665+40	38.4 LT	51	1		1
1665+30	39.1 RT	1665+81	39.1 RT	51	1		1
1665+83	39.0 LT	1666+40	39.0 LT	64	1		1
1666+17	36.5 RT	1666+55	36.5 RT	43	1		1
TOTAL				209	4	166	4

FOLDER 115-2						CONTRACT NO. 66B58
ILL RTE 115	DRAINAGE DITCH, 3.7 MILES SOUTH OF IL 116					FORD COUNTY
PERMANENT SURVEY MARKER SCHEDULE						
			EXISTING	PROPOSED	MONUMENT	
MONUMENT	DESCRIPTION	APPROXIMATE LOCATION	MONUMENT	MONUMENT	RECORD TO BE	RESPONSIBILITY
NUMBER			TYPE	TYPE	RECORDED	
N/A	NO PERMANENT SURVEY MARKERS OR	N/A	N/A	N/A	N/A	N/A
	OTHER MONUMENTS TO BE SET OR RESET.					
ONLY THE ORIGINAL SCOPE OF THIS JOB HAS BEEN SEARCHED FOR MONUMENTS. R.E. MUST INFORM PLATS AND PLANS TO SEARCH FOR ADDITIONAL MONUMENTS						
PRIOR TO CONSTRUCTION IF ADDENDUMS HAVE BEEN ADDED TO THIS JOB.						
UNKNOWN MONUMENTS MAY EXIST. IF AN UNLISTED MONUMENT IS FOUND, R.E. IS REQUIRED TO PROTECT THE MONUMENT FROM DAMAGE UNTIL A PLATS AND PLANS						
LAND SURVEYOR CAN DOCUMENT THE MONUMENT. PLATS AND PLANS WILL RESET SUCH MONUMENTS IN KIND FOLLOWING CONSTRUCTION.						

MODEL: Default
FILE NAME: Z:\Shared\Projects\IDOT\IDOT-00340\03_Design\02_CADD Sheets\W046\0396B58-sht-schedules 2.dgn

OSEH inc. 910 W. VAN BUREN STREET
SUITE 601
CHICAGO, IL 60607
WWW.OSEI-INC.COM

USER NAME = Aslnat\Andrew	DESIGNED - AA	REVISED -	
	DRAWN - AA	REVISED -	
PLOT SCALE = 8.333 ' / in.	CHECKED - MM	REVISED -	
PLOT DATE = 2/24/2025	DATE - 2/24/2025	REVISED -	

STATE OF ILLINOIS
DEPARTMENT OF TRANSPORTATION

IL ROUTE 115
SCHEDULE OF QUANTITIES

SCALE: SHEET 2 OF 3 SHEETS STA. TO STA.

F.A.P RTE.	SECTION	COUNTY	TOTAL SHEETS	SHEET NO.
796	(106BR-2)BR	FORD	55	10
		CONTRACT NO. 66B58		
	ILLINOIS	FED. AID PROJECT		

EARTHWORK SCHEDULE				
LOCATION STATION TO STATION COLUMN 1	EARTH EXCAVATION	EXCAVATION ADJUSTED FOR SHRINKAGE (25%)	EMBANKMENT	EARTHWORK BALANCE WASTE (+) OR SHORTAGE (-)
	COLUMN 2	COLUMN 3	COLUMN 4	COLUMN 5
	CU YD	CU YD	CU YD	CU YD
STA 1661+00 TO STA 1661+50	18	14	9	5
STA 1661+50 TO STA 1662+00	23	17	23	-6
STA 1662+00 TO STA 1662+50	26	20	32	-12
STA 1662+50 TO STA 1663+00	29	22	100	-78
STA 1663+00 TO STA 1663+50	30.09	23	163	-140
STA 1663+50 TO STA 1664+00	30.65	23	204	-181
STA 1664+00 TO STA 1664+50	34	25	252	-226
STA 1664+50 TO STA 1665+00	86	65	219	-154
STA 1665+00 TO STA 1665+50	145	108	113	-5
STA 1665+50 TO STA 1666+00	510	383	1	382
STA 1666+00 TO STA 1666+50	202	151	78	73
STA 1666+50 TO STA 1667+00	107	80	307	-227
STA 1667+00 TO STA 1667+50	53	40	296	-257
STA 1667+50 TO STA 1668+00	30	23	218	-196
STA 1668+00 TO STA 1668+50	26	20	163	-143
STA 1668+50 TO STA 1669+00	26	20	55	-35
STA 1669+00 TO STA 1669+50	28	21	44	-23
STA 1669+50 TO STA 1670+00	23	17	18	-1
TOTALS	1,427	1,070	2,294	-1,224

SHRINKAGE FACTOR: 25%

EARTH EXCAVATION: 4, & 5 - LOCATION AND QUANTITIES FROM CROSS SECTIONS
CUT = EARTH EXCAVATION, FILL = EMBANKMENT
COLUMN 5 = COLUMN 3 - COLUMN 4

PAY ITEMS

COLUMN 2 IS EARTH EXCAVATION (20200100)

COLUMN 5 IS FURNISHED EXCAVATION (20400800)

PAY ITEMS:

EARTH EXCAVATION = 1,427 CU YD

FURNISHED EXCAVATION = 1,224 CU YD

MODEL: Default
FILE NAME: Z:\Shared\Projects\IDOT\IDOT-00-00103_Design\02_CADD Sheets\WO#6\D36B58-sht-schedule 3.dgn

OSEH inc.
910 W. VAN BUREN STREET
SUITE 601
CHICAGO, IL 60607
WWW.OSEHINC.COM

USER NAME = AslinaI\Andrew	DESIGNED - AA	REVISED -	
	DRAWN - AA	REVISED -	
PLOT SCALE = 100.000 ' / in.	CHECKED - MM	REVISED -	
PLOT DATE = 2/24/2025	DATE - 2/24/2025	REVISED -	

STATE OF ILLINOIS
DEPARTMENT OF TRANSPORTATION

IL ROUTE 115
SCHEDULE OF QUANTITIES

SCALE: SHEET 3 OF 3 SHEETS STA. TO STA.

F.A.P RTE.	SECTION	COUNTY	TOTAL SHEETS	SHEET NO.
796	(106BR-2)BR	FORD	55	11
		CONTRACT NO. 66B58		
	ILLINOIS	FED. AID PROJECT		

BM #1 CUT "□" TOP S.W. CORNER OF S.W. ABUT
S.N. 027–0074
STA. 1666 + 22.10 17.47′ RT
ELEV. 657.37

BM #2 R.R SPIKE IN TEL POLE AT N.E. QUAD
S.N. 027–0074
STA. 1664 + 77.28 32.55′ LT
ELEV. 655.35

BM #60 CH "□" TOP N.E. CORNER OF N.E. ABUT
S.N. 027–0074
STA. 1665 + 38.39 17.77′ LT
ELEV. 657.34

ALIGNMENT COORDINATES – IL 115

	STATION	NORTHING	EASTING
POB	1631 + 30.00	1518316.2749	1020032.9666
PI	1665 + 80.00	1514867.4840	1020124.2941
POE	1684 + 65.00	1512983.1445	1020174.1934

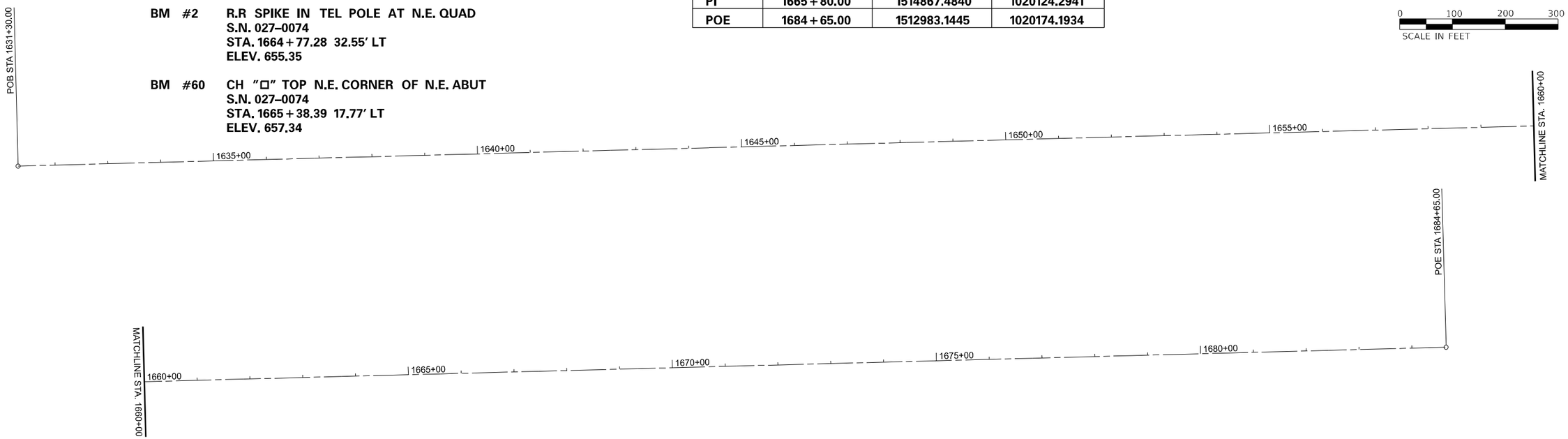

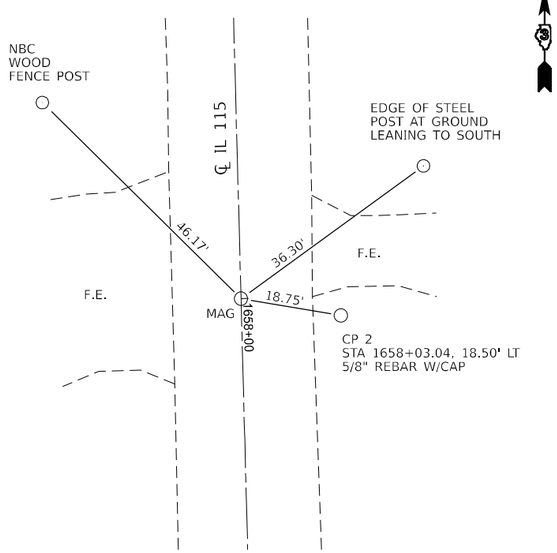

POT STA 1658 + 00.00

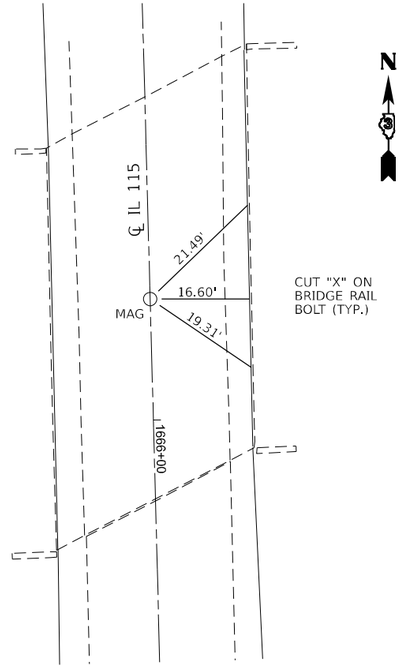

POT STA 1665 + 80.00
℄ S.N. 027–0074

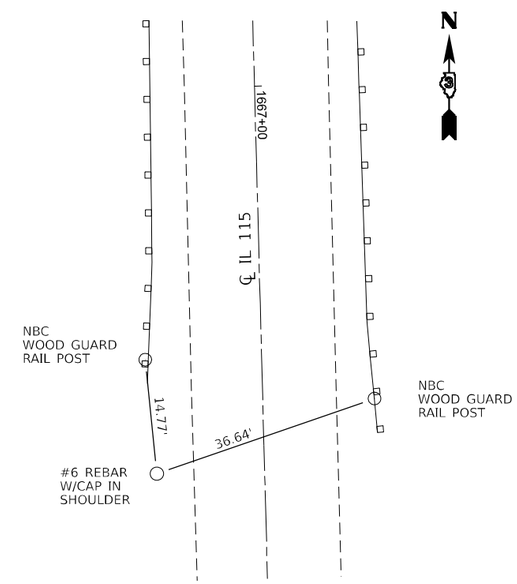

CP 1 STA 1667 + 55.10, 17.79′ RT

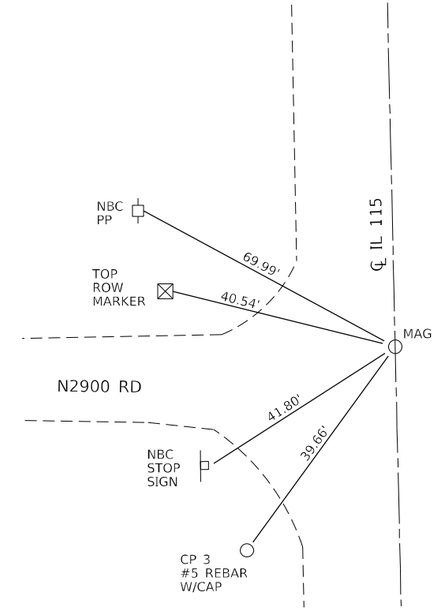

POT STA 1684 + 65.00
CP 3 – STA 1684 + 95.67, 39.61′ RT

MODEL: Default
FILE NAME: Z:\Shared\Projects\IDOT\IDOT-003-000\03_Design\02_CADD Sheets\WO#6\B56858-dh-ATB.dgn

OSEH inc. 910 W. VAN BUREN STREET SUITE 400 CHICAGO, IL 60607 WWW.OSEHINC.COM

USER NAME = AlexDefrancesco	DESIGNED - AA	REVISED -
	DRAWN - AA	REVISED -
PLOT SCALE = 200.000 ' / in.	CHECKED - MM	REVISED -
PLOT DATE = 2/24/2025	DATE - 2/24/2025	REVISED -

STATE OF ILLINOIS
DEPARTMENT OF TRANSPORTATION

IL ROUTE 115
ALIGNMENT, TIES AND BENCHMARKS

SCALE: | SHEET 1 OF 1 SHEETS | STA. | TO STA.

F.A.P RTE.	SECTION	COUNTY	TOTAL SHEETS	SHEET NO.
796	(106BR-2)BR	FORD	55	12
		CONTRACT NO. 66B58		
	ILLINOIS	FED. AID PROJECT		

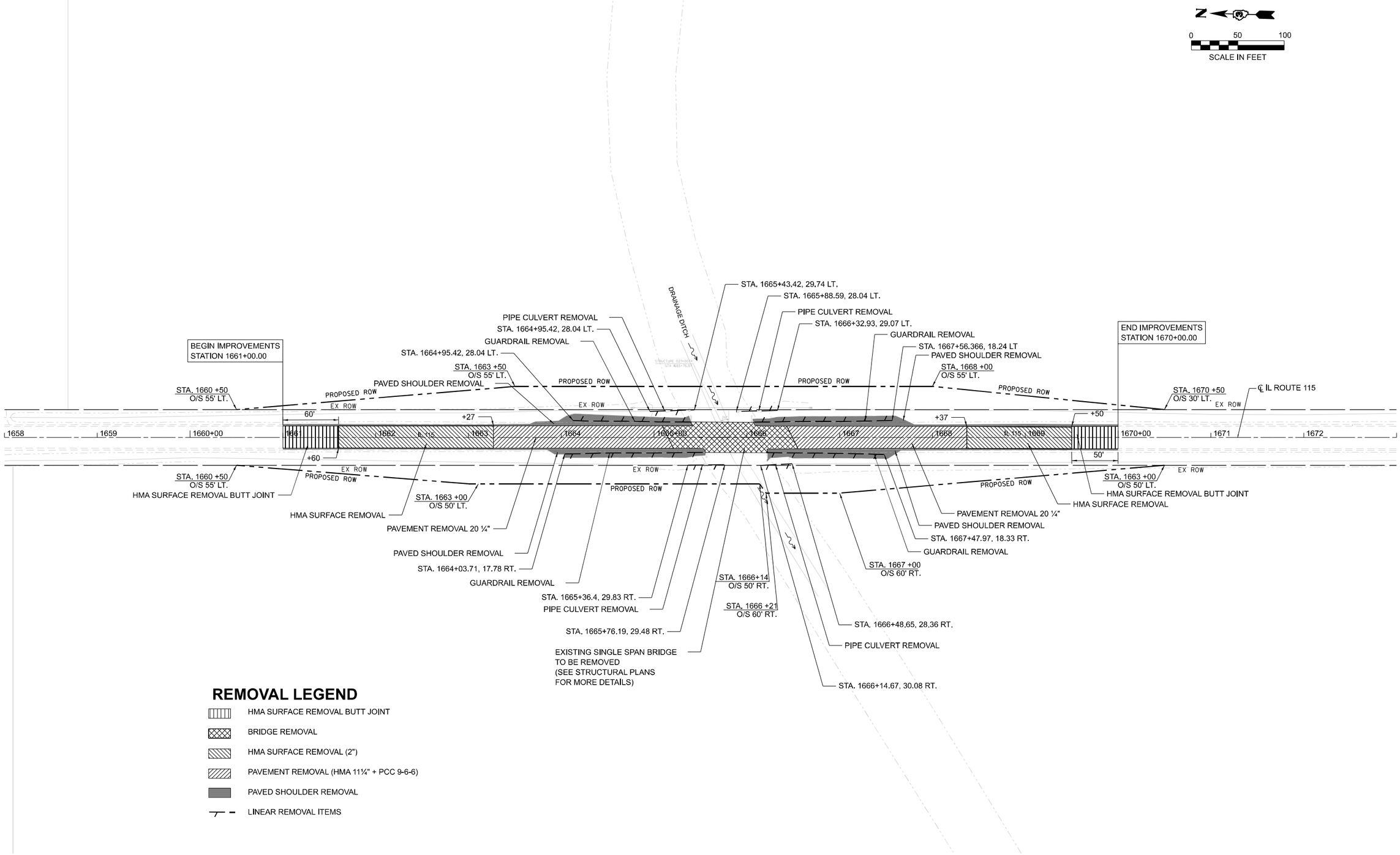

MODEL: EIBLIL115 - Plan 2 [Sheet]
FILE NAME: Z:\Shared\Projects\IDOT\IDOT-20-00903_Design\02_CADD Sheets\WO#6\D36B58-sht-removal\PLN.dgn

OSEH inc.
CONTRACT MAINTENANCE MANAGEMENT
300 W. VAN BUREN STREET
SUITE 603
CHICAGO, IL 60607
WWW.OSEHINC.COM
(773) 750 - 6930

USER NAME = AslinatiAndrew	DESIGNED - AA	REVISED -	
	DRAWN - AA	REVISED -	
PLOT SCALE = 0.16666633 ' / in.	CHECKED - MM	REVISED -	
PLOT DATE = 2/24/2025	DATE - 2/24/2025	REVISED -	

STATE OF ILLINOIS
DEPARTMENT OF TRANSPORTATION

IL ROUTE 115
REMOVAL PLANS

SCALE: 1"=50' | SHEET 1 OF 1 SHEETS | STA. 1658+00.00 TO STA. 1673+00.00

F.A.P RTE.	SECTION	COUNTY	TOTAL SHEETS	SHEET NO.
796	(106BR-2)BR	FORD	55	13

CONTRACT NO. 66B58

ILLINOIS | FED. AID PROJECT

LEGEND

- FURNISHING AND ERECTING RIGHT OF WAY MARKERS
- PROPOSED GUARDRAIL
- HOT-MIX ASPHALT SURFACE COURSE, IL 9.5, MIX C, N50
- HOT-MIX ASPHALT SURFACE COURSE, IL 9.5, MIX C, N50
  HOT-MIX ASPHALT BINDER COURSE, IL 19.0, N50
- HOT-MIX ASPHALT SURFACE COURSE, IL 9.5, MIX C, N50
  HOT-MIX ASPHALT BINDER COURSE, IL 19.0, N50
  AGG BASE COURSE, TYPE A
- HOT-MIX ASPHALT SHOULDER, 8"
- DIRECTION OF DITCH FLOW

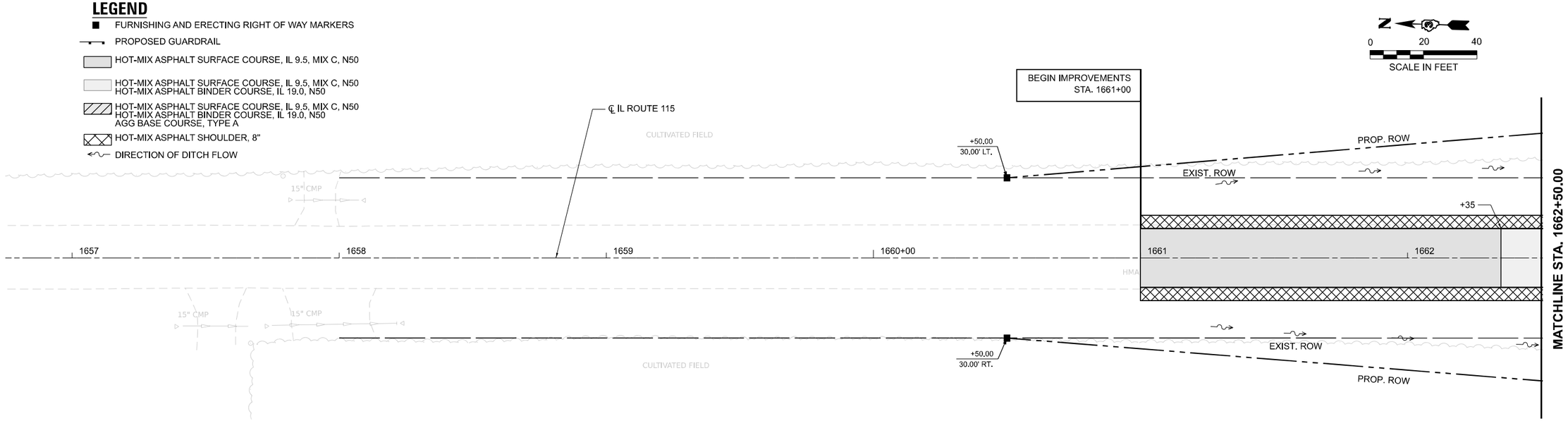

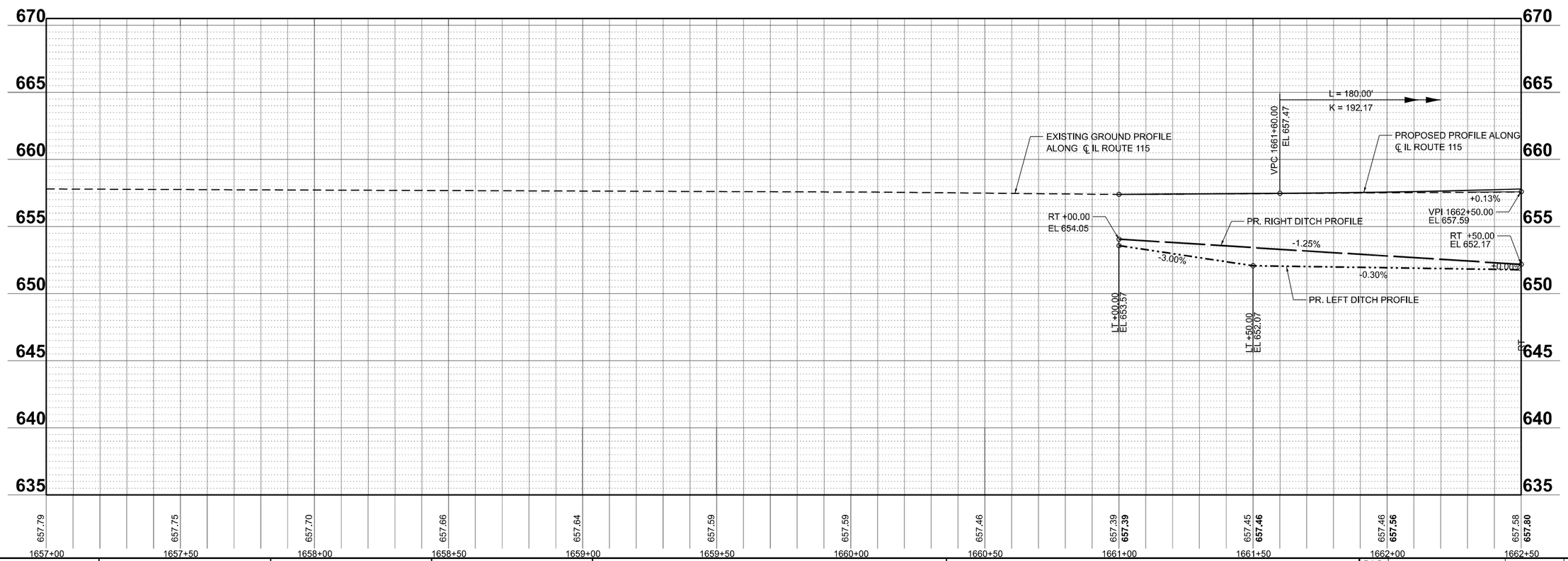

MODEL: ExBL-IL115 - Plan +2 [Sheet]
FILE NAME: Z:\Shared Projects\IDOT\IDOT-003-009\03_Design\02_CADD Sheets\WO#6\D366B58-sht-pltprf.dgn

OSEH inc.
910 W. VAN BUREN STREET
SUITE 633
CHICAGO, IL 60607
INFO@OSEHINC.COM
CONTRACT MULTI-NAMB MOHAMMED (773) 750 - 6930

USER NAME = AsInstl\Andrew	DESIGNED - AA	REVISED -	
	DRAWN - AA	REVISED -	
PLOT SCALE = 0.16666633 ' / in.	CHECKED - MM	REVISED -	
PLOT DATE = 2/24/2025	DATE - 2/24/2025	REVISED -	

STATE OF ILLINOIS
DEPARTMENT OF TRANSPORTATION

IL ROUTE 115
PLAN AND PROFILE

SCALE: 1"=20' | SHEET OF SHEETS | STA. 1657+00.00 TO STA. 1662+50.00

F.A.P RTE.	SECTION	COUNTY	TOTAL SHEETS	SHEET NO.
796	(106BR-2)BR	FORD	55	14

CONTRACT NO. 66B58

ILLINOIS | FED. AID PROJECT

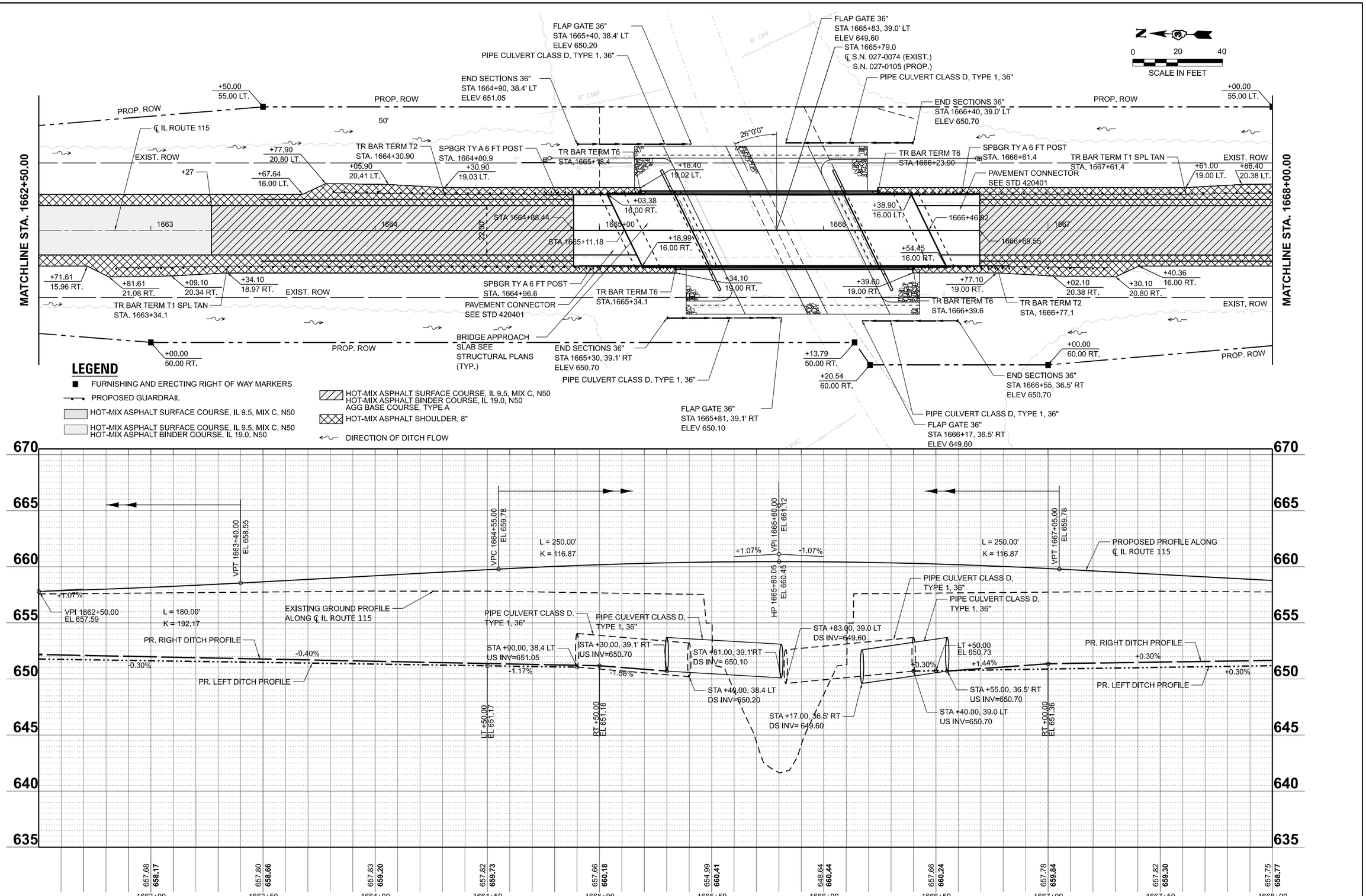

MODEL: ExBL-IL115 - Plan 2-2 [Sheet]
FILE NAME: Z:\Shared\Projects\IDOT\IDOT-003-009\03_Design\02_CADD Sheets\WOM6\D36B58-sht-hpref.dgn

OSEH inc.
9 O'W. VAN BUREN STREET
SUITE 1020
CHICAGO, IL 60607
WWW.OSEHINC.COM
CONTACT MUTI-MAMB MOHAMMED (773) 750 - 6930

USER NAME = AsInstl\Andrew	DESIGNED - AA	REVISED -	
	DRAWN - AA	REVISED -	
PLOT SCALE = 0.16666633 ' / in.	CHECKED - MM	REVISED -	
PLOT DATE = 2/24/2025	DATE - 2/24/2025	REVISED -	

STATE OF ILLINOIS
DEPARTMENT OF TRANSPORTATION

IL ROUTE 115
PLAN AND PROFILE

SCALE: 1"=20' | SHEET OF SHEETS | STA. 1662+50.00 TO STA. 1668+00.00

F.A.P RTE.	SECTION	COUNTY	TOTAL SHEETS	SHEET NO.
796	(106BR-2)BR	FORD	55	15

CONTRACT NO. 66B58

ILLINOIS | FED. AID PROJECT

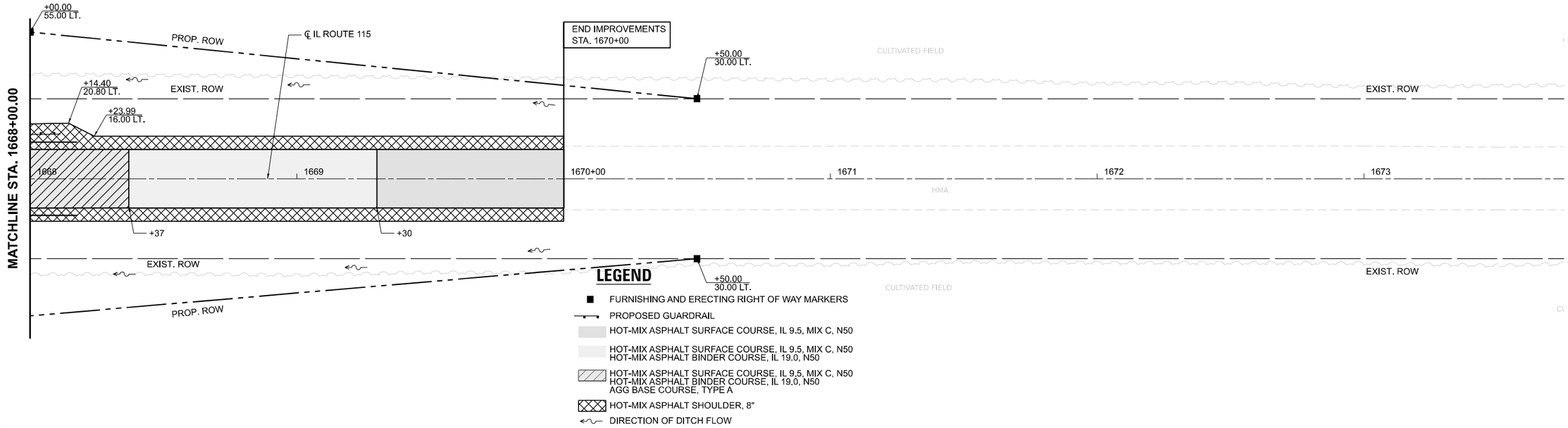

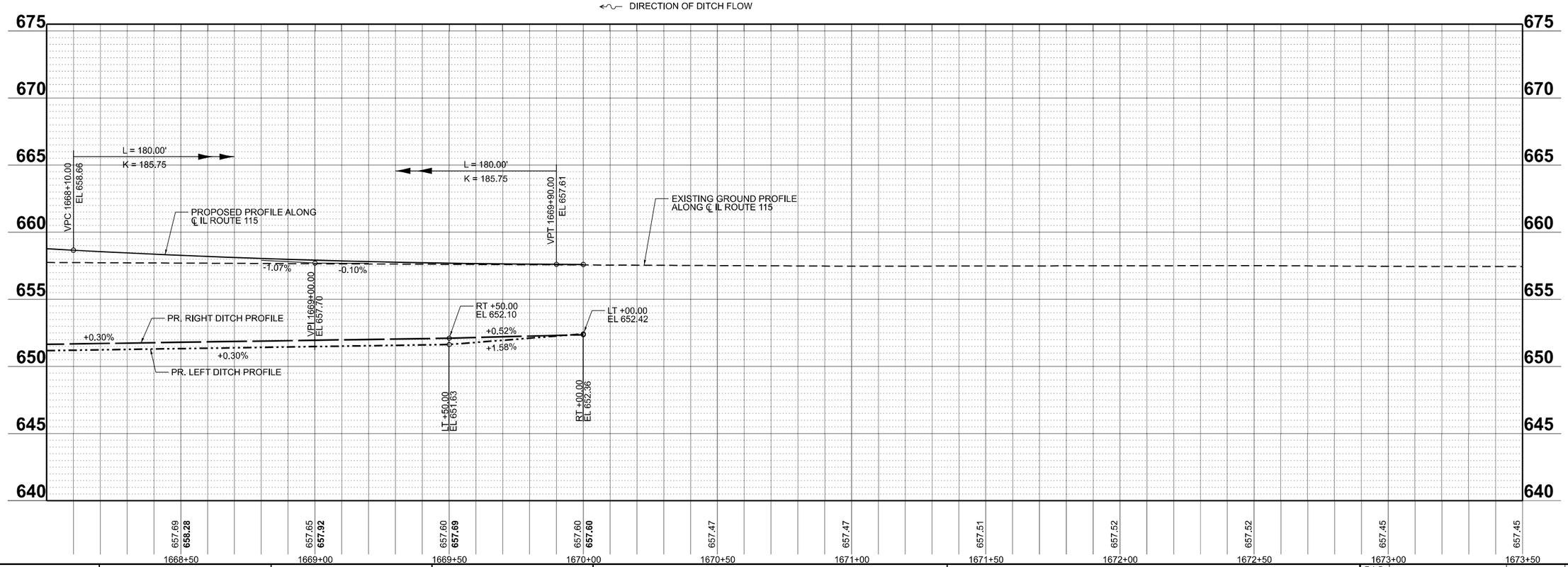

MODEL: ExBL-IL 115 - Plan 3-2 [Sheet]
FILE NAME: Z:\Shared\Projects\IDOT\IDOT-00340\03_Design\02_CADD Sheets\WO46\D336B58-sht-plan2.dgn

OSEH inc.
910 W. VAN BUREN STREET
SUITE 603
CHICAGO, IL 60607
WWW.OSEHINC.COM
CONTACT MUTHANNI MOHAMMED (773) 753-4610

USER NAME = Aslnat\Andrew	DESIGNED - AA	REVISED -	
	DRAWN - AA	REVISED -	
PLOT SCALE = 0.16666667 ' / In.	CHECKED - MM	REVISED -	
PLOT DATE = 2/24/2025	DATE - 2/24/2025	REVISED -	

STATE OF ILLINOIS
DEPARTMENT OF TRANSPORTATION

IL ROUTE 115
PLAN AND PROFILE

SCALE: 1"=20' | SHEET OF SHEETS | STA. 1668+00.00 TO STA. 1673+50.00

F.A.P RTE.	SECTION	COUNTY	TOTAL SHEETS	SHEET NO.
796	(106BR-2)BR	FORD	55	16

CONTRACT NO. 66B58

ILLINOIS | FED. AID PROJECT

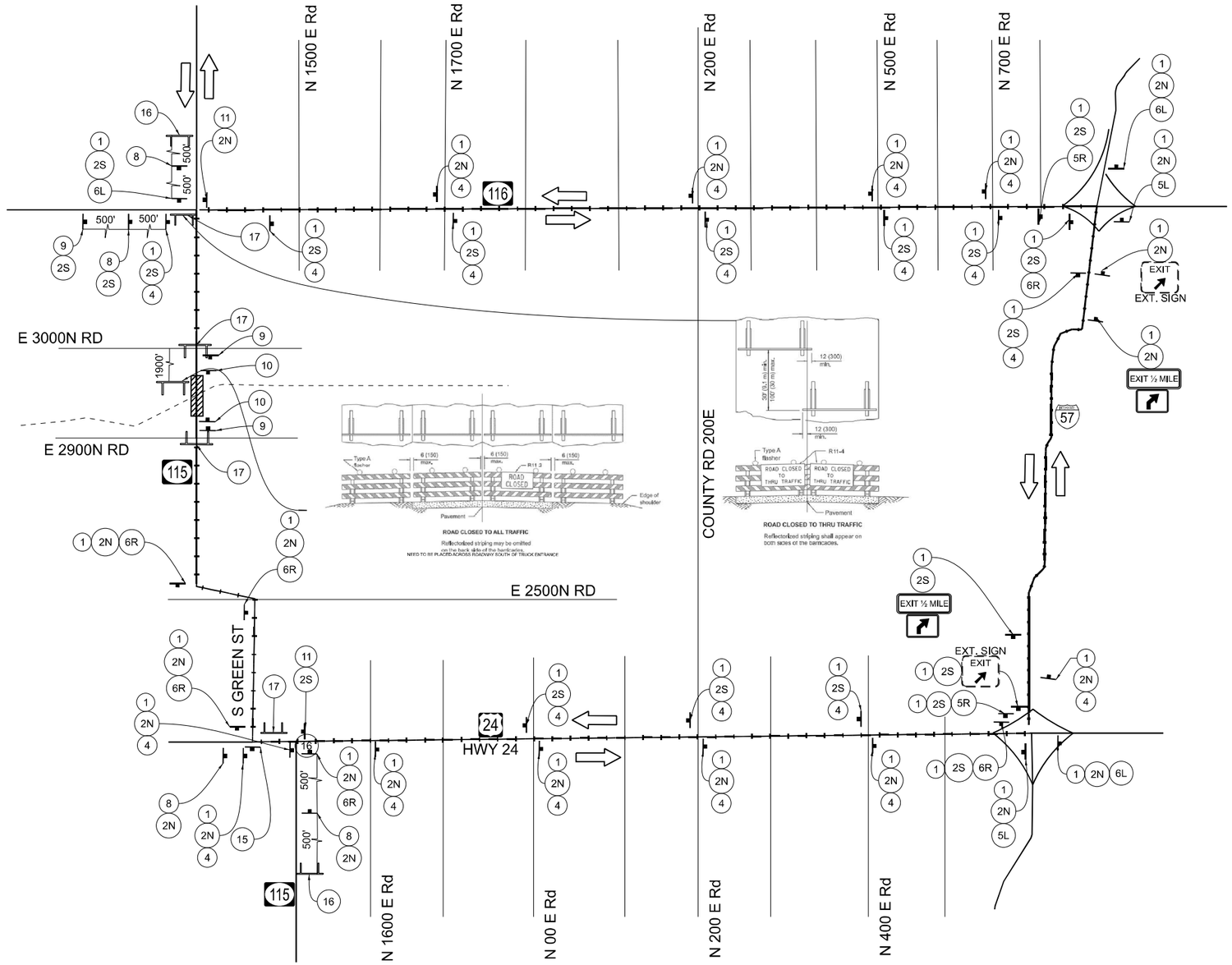

GENERAL NOTES:

1. ALL SIGNING SHALL BE IN ACCORDANCE WITH THE PROVISIONS OF THE STATE OF ILLINOIS "STANDARD SPECIFICATIONS FOR ROAD AND BRIDGE CONSTRUCTION ADOPTED JANUARY 1, 2022", THE DETAILS IN THESE PLANS, THE LATEST EDITION OF THE STATE OF ILLINOIS "MANUAL OF UNIFORM TRAFFIC CONTROL DEVICES", AND THE SPECIAL PROVISIONS.

2. THE CONTRACTOR SHALL UTILIZE FORM BSPE 725 TO SUPPLY TO THE ENGINEER THE NAMES AND TELEPHONE NUMBERS OF HIS REPRESENTATIVES ON THE CONSTRUCTION SITE AND HIS REPRESENTATIVE RESPONSIBLE FOR THE DETOUR SIGNING PRIOR TO THE START OF THE WORK.

3. THE ROAD SHALL NOT BE CLOSED UNTIL ALL SIGNING IS ERECTED IN ACCORDANCE WITH THE DETOUR PLAN AND INSPECTED AND APPROVED BY THE ENGINEER.

4. THE CONTRACTOR SHALL BE RESPONSIBLE FOR ENSURING THAT ALL BARRICADES, SIGNS, LIGHTS, AND OTHER DEVICES INSTALLED ARE IN PLACE AND OPERATING 24 HOURS EACH DAY INCLUDING SUNDAYS AND HOLIDAYS DURING THE TIME THE DETOUR IS IN EFFECT.

5. THE TRAFFIC CONTROL SHOWN ON THE DETOUR PLAN IS THE MINIMUM NECESSARY TO ENSURE THIS ROAD CLOSURE. THE CONTRACTOR SHALL MAKE ALL CHANGES IN TRAFFIC CONTROL THAT IS DEEMED NECESSARY BY THE ENGINEER. ADDITIONS AND DELETIONS OF TRAFFIC CONTROL FOR THIS DETOUR SHALL BE CONSIDERED INCLUDED IN THE COST OF THE PAY ITEM "TRAFFIC CONTROL AND PROTECTION (SPECIAL)".

6. ALL DETOUR SIGNING SHALL BE POST MOUNTED IF THE ROAD CLOSURE IS TO EXCEED FOUR (4) CALENDAR DAYS.

7. ALL DETOUR SIGNING EXCEPT REGULATORY SIGNS SHALL HAVE BLACK LEGENDS ON FLUORESCENT ORANGE SHEETING AND STANDARD BLACK BORDERS. THE FLUORESCENT ORANGE REFLECTIVE SHEETING SHALL MEET THE REQUIREMENTS OF ARTICLE 1084.02 OF THE STANDARD SPECIFICATIONS. ALL DETOUR SIGNING SHALL BE NEW OR LIKE NEW CONDITION OF THE SIGNS. THE ENGINEER SHALL BE THE SOLE JUDGE OF THE CONDITION OF THE SIGNS.

8. THE SIZES OF ALL SIGNS NOT SPECIFIED IN THESE PLANS SHALL BE AS REQUIRED BY THE ILLINOIS SUPPLEMENT TO THE MANUAL ON UNIFORM TRAFFIC CONTROL DEVICES.

9. AS A MINIMUM, ALL AMBER FLASHING LIGHTS THAT ARE REQUIRED FOR THIS DETOUR SHALL MEET THE REQUIREMENTS FOR TYPE A-LOW INTENSITY FLASHING LIGHTS IN ARTICLE 1084.01 OF THE STANDARD SPECIFICATIONS. ALL LIGHTS SHALL OPERATE DURING THE HOURS OF DARKNESS. ONLY LIGHTS THAT HAVE BEEN APPROVED BY THE ILLINOIS DEPARTMENT OF TRANSPORTATION SHALL BE USED.

10. WHEN REQUIRED THE MINIMUM DIMENSIONS OF THE ORANGE WARNING FLAGS ARE 18" X 18".

11. ALL TYPE III BARRICADES SHALL HAVE TWO (2) AMBER TYPE A-LOW INTENSITY FLASHING LIGHTS SPACED NEAR THE CENTERLINE OF THE SUPPORTS.

12. THE ROAD NAME SIGN SHALL HAVE A BLACK LEGEND ON FLUORESCENT ORANGE REFLECTIVE SHEETING. THE SIGN SHALL BE A 9" X VARIABLE OR A 12" X VARIABLE WITH DESIGN SERIES C LETTERS. THE CAPITAL LETTERS SHALL BE 6" WITH 5" LOWER CASE.

13. DURING NON-WORKING HOURS AT THE POINT OF ROAD CLOSURE TO ALL TRAFFIC THE CONTRACTOR SHALL PROVIDE A MEANS TO RESTRAIN THE BARRICADES FROM EASY MOVEMENT BY VANDALS. THE CHOSEN METHOD SHALL BE APPROVED BY THE ENGINEER.

14. CONSTRUCTION EQUIPMENT SHALL NOT BE PARKED WITH 25 FT BEHIND THE TYPE III BARRICADES. IN ANY EVENT ARTICLE 701.04 OF THE STANDARD SPECIFICATIONS SHALL APPLY.

15. THE CONTRACTOR SHALL BE RESPONSIBLE FOR MAINTAINING THE VISIBILITY OF ALL DETOUR AND CONSTRUCTION SIGNING, INCLUDING BRUSHING BACK VEGETATION IF DEEMED NECESSARY BY THE ENGINEER.

16. THE ENGINEER SHALL BE NOTIFIED AT LEAST TWENTY FOUR (24) HOURS BEFORE THE ROAD IS TO BE OPENED TO TRAFFIC. THE ENGINEER WILL CONTACT THE APPROPRIATE LOCAL AGENCIES AND INTERESTED PARTIES.

17. THE ENGINEER SHALL BE NOTIFIED IN WRITING AT LEAST 21 DAYS PRIOR TO THE DAY THE DETOUR IS TO BE IN EFFECT. THE ENGINEER SHALL DETERMINE THE HOUR OF CLOSURE. THE ENGINEER WILL CONTACT THE APPROPRIATE LOCAL AGENCIES AND INTERESTED PARTIES.

18. CONFLICTING SIGNS SHALL BE COVERED. NO TAPE OR DRILLED HOLES ALLOWED IN THE FACE OF THE SIGN.

19. DETOUR CONFIRMATION SIGNS TO BE INSTALLED ADJACENT TO EXISTING STATE/INTERSTATE CONFORMATION SIGNS

20. DETOUR SIGNS SHALL BE ASSEMBLED IN A TOP-TO-BOTTOM SEQUENCE, AS FOLLOWS: "DETOUR (M4-8)"/"CARDINAL DIRECTION (M3-2)"/"ROUTE (W20-3)"/"DIRECTIONAL ARROW (M6-3)(M5-1)"

LEGEND

1	DETOUR	M4-8-2412	
2S	SOUTH / ILLINOIS 115	M3-2S-2412 / W20-3-4848	
2N	NORTH / ILLINOIS 115	M3-2N-2412 / W20-3-4848	
4		M6-3-2115	
5L		M5-1L-2115	
6L		M5-1L-2115	
5R		M5-1R-2115	
6R		M6-1R-2115	
8	DETOUR AHEAD	W20-2-4848	
9	ROAD CLOSED AHEAD	W20-3-4848	
10	ROAD CLOSED 500 FT	W20-3-4848	
11	END DETOUR	M4-8A-2418	
12	ROAD CLOSED	R11-2-4830	
13	ROAD CLOSED TO THRU TRAFFIC	M4-8A-6030	
14	DETOUR	M4-10L-4818	
15	DETOUR	M4-10R-4818	
16	IL 115 CLOSED 4 MILES AHEAD FOLLOW DETOUR		
17	ROAD CLOSED XX MILES AHEAD LOCAL TRAFFIC ONLY	R11-3A-6030	
18	ROAD CLOSED		

TYPE III BARRICADE

DETOUR ROUTE

WORK AREA

SIGN PANEL

MODEL: Default
FILE NAME: Z:\Shared\Projects\IDOT\IDOT-00\00\03_Design\02_CADD Sheets\W2465D3968S5-sht-MOT Detour Plan.dgn

OSEH inc. 910 W. VAN BUREN STREET SUITE 601 CHICAGO, IL 60607 WWW.OSEI-INC.COM

USER NAME = AsInal\Andrew	DESIGNED - AA	REVISED -	
	DRAWN - AA	REVISED -	
PLOT SCALE = 100.000 ' / in.	CHECKED - MM	REVISED -	
PLOT DATE = 2/24/2025	DATE - 2/24/2025	REVISED -	

STATE OF ILLINOIS
DEPARTMENT OF TRANSPORTATION

IL ROUTE 115
DETOUR PLAN

SCALE: | SHEET 1 OF 1 SHEETS | STA. | TO STA.

F.A.P RTE.	SECTION	COUNTY	TOTAL SHEETS	SHEET NO.
796	(106BR-2)BR	FORD	55	17

CONTRACT NO. 66B58

ILLINOIS | FED. AID PROJECT

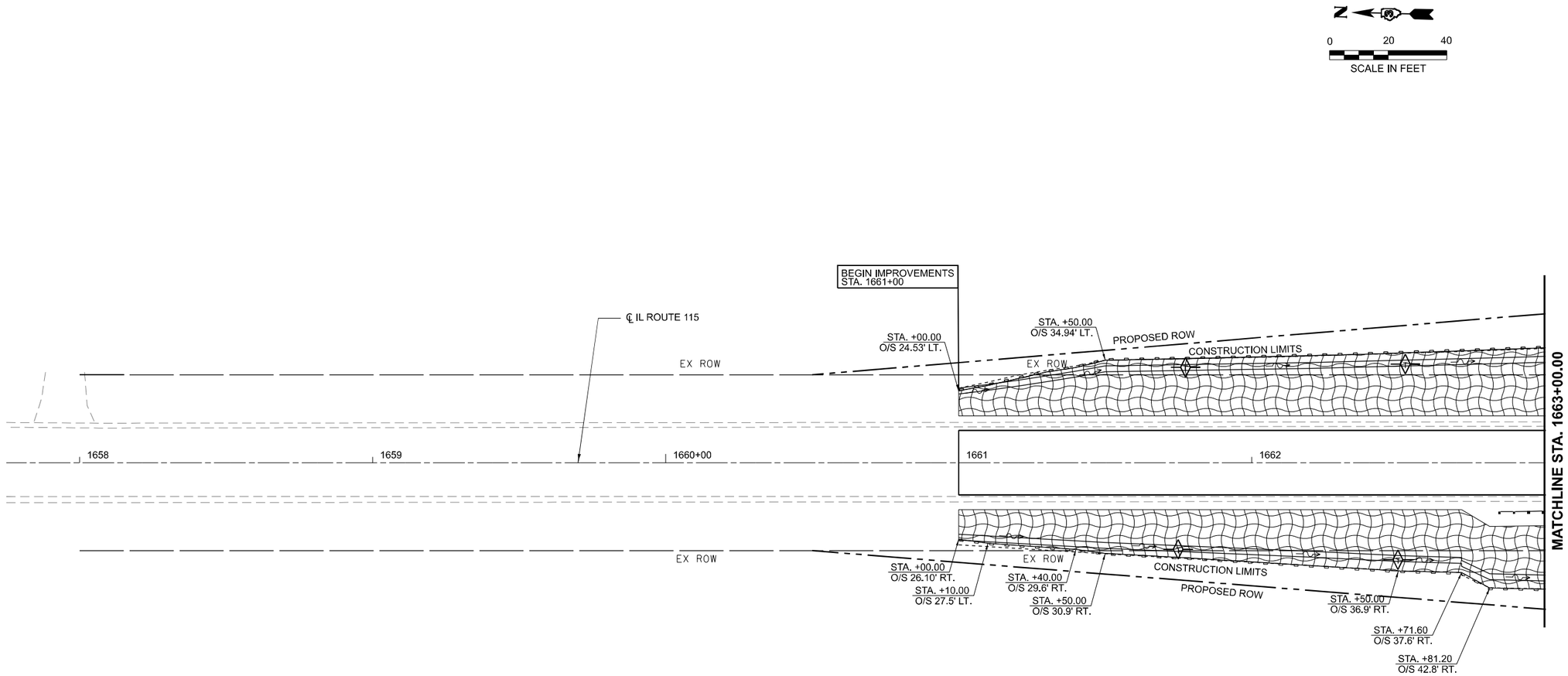

NOTES

1. ALL SEDIMENT AND EROSION CONTROL SYSTEMS SHALL BE CONSTRUCTED WITHIN THE RIGHT-OF-WAY OR PROPOSED RIGHT-OF-WAY
2. ALL SEDIMENT AND EROSION CONTROL SYSTEMS SHALL BE INSPECTED WEEKLY AND WITHIN 24 HOURS AFTER EACH ½" OR GREATER RAIN EVENT.
3. ALL TEMPORARY DITCH CHECKS SHALL BE PLACED AT 100' SPACING UNLESS OTHERWISE NOTED.

LEGEND

- TEMPORARY EROSION CONTROL SEEDING, EROSION CONTROL BLANKET & SEEDING, CLASS 2A
- STONE RIPRAP, CLASS A4 & FILTER FABRIC
- TEMPORARY DITCH CHECK
- PERIMETER EROSION BARRIER
- DIRECTION OF DITCH FLOW

MODEL: ExBL-IL115 - Plan 2 [Sheet]
FILE NAME: Z:\Shared\Projects\IDOT\IDOT-203-A00\03_Design\02_CADD Sheets\WO#6\D66B58-sht-ErosPLN_.dgn

OSEH inc. 310 W. VAN BUREN STREET SUITE 620 CHICAGO, IL 60607 WWW.OSEHPC.COM

USER NAME = Aslnat\Andrew	DESIGNED - AA	REVISED -	
	DRAWN - AA	REVISED -	
PLOT SCALE = 0.16666633 ' / in.	CHECKED - MM	REVISED -	
PLOT DATE = 2/24/2025	DATE - 2/24/2025	REVISED -	

STATE OF ILLINOIS
DEPARTMENT OF TRANSPORTATION

IL ROUTE 115
EROSION & SEDIMENT CONTROL PLAN

SCALE:1"=20' | SHEET OF SHEETS | STA. 1658+00.00 TO STA. 1663+00.00

F.A.P RTE.	SECTION	COUNTY	TOTAL SHEETS	SHEET NO.
796	(106BR-2)BR	FORD	55	18

CONTRACT NO. 66B58

ILLINOIS | FED. AID PROJECT

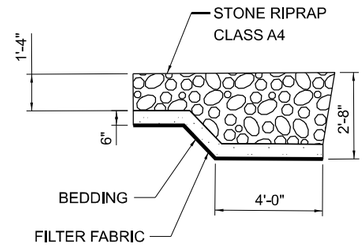

FLANK STONE RIPRAP TREATMENT
FOR STREAM CROSSING

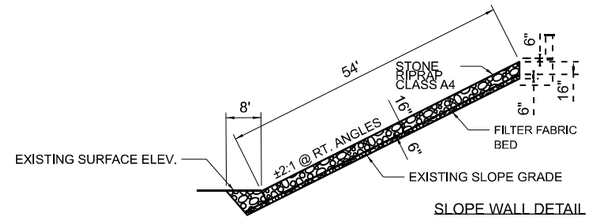

SLOPE WALL DETAIL

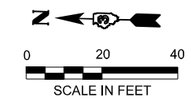

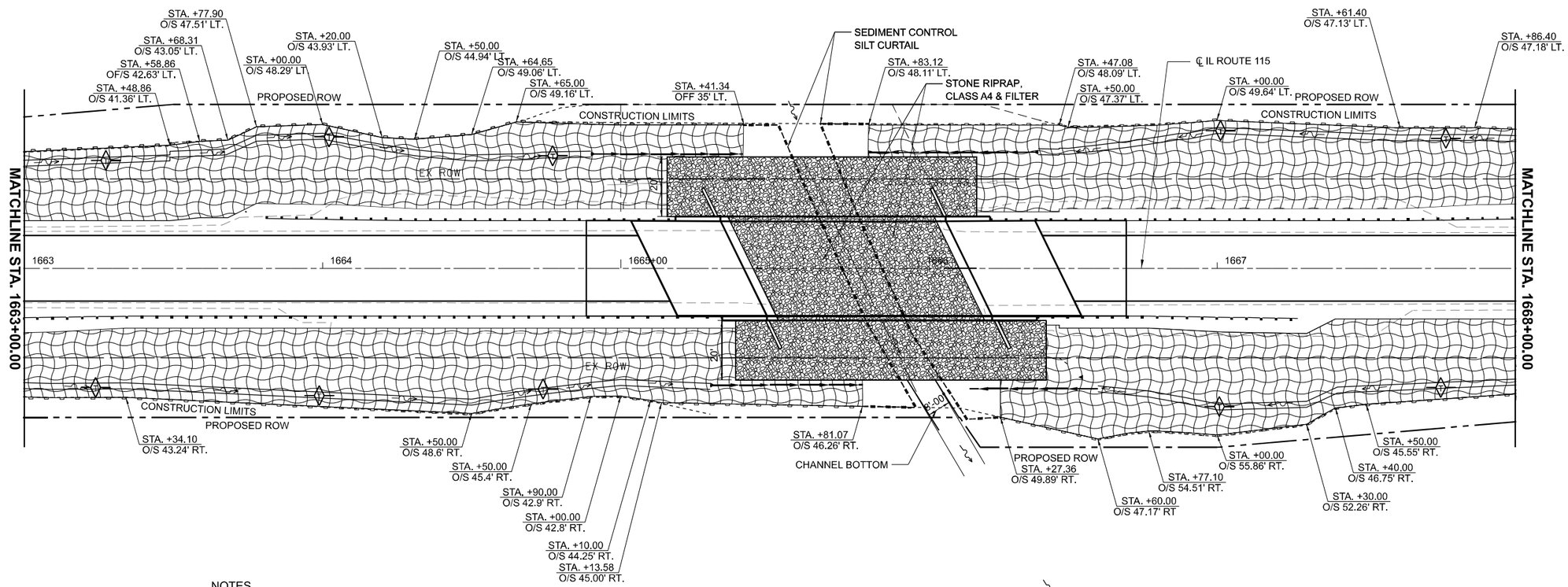

NOTES

1. ALL SEDIMENT AND EROSION CONTROL SYSTEMS SHALL BE CONSTRUCTED WITHIN THE RIGHT-OF-WAY OR PROPOSED RIGHT-OF-WAY
2. ALL SEDIMENT AND EROSION CONTROL SYSTEMS SHALL BE INSPECTED WEEKLY AND WITHIN 24 HOURS AFTER EACH ½" OR GREATER RAIN EVENT.
3. ALL TEMPORARY DITCH CHECKS SHALL BE PLACED AT 100' SPACING UNLESS OTHERWISE NOTED.

LEGEND

- TEMPORARY EROSION CONTROL SEEDING, EROSION CONTROL BLANKET & SEEDING, CLASS 2A
- STONE RIPRAP, CLASS A4 & FILTER FABRIC
- TEMPORARY DITCH CHECK
- PERIMETER EROSION BARRIER
- SEDIMENT CONTROL, SILT CURTAIN
- DIRECTION OF DITCH FLOW

MODEL: EnBuIL115-Plan 3 [Sheet]
FILE NAME: Z:\Shared\Projects\DOT\DOT-093-00\03_Design\02_CADD Sheets\WORKD\66B58<ehe>ErosPLN_.dgn

OSEH inc. 9120 W. VAN BUREN STREET SUITE 020 CHICAGO, IL 60607 WWW.OSAMPC.COM

USER NAME = AslnatlAndrew	DESIGNED - AA	REVISED -	
	DRAWN - AA	REVISED -	
PLOT SCALE = 0.16666633 ' / in.	CHECKED - MM	REVISED -	
PLOT DATE = 2/24/2025	DATE - 2/24/2025	REVISED -	

STATE OF ILLINOIS
DEPARTMENT OF TRANSPORTATION

IL ROUTE 115
EROSION & SEDIMENT CONTROL PLAN

SCALE:1"=20' | SHEET OF SHEETS | STA. 1663+00.00 TO STA. 1668+00.00

F.A.P RTE.	SECTION	COUNTY	TOTAL SHEETS	SHEET NO.
796	(106BR-2)BR	FORD	55	19
		CONTRACT NO. 66B58		
		ILLINOIS	FED. AID PROJECT	

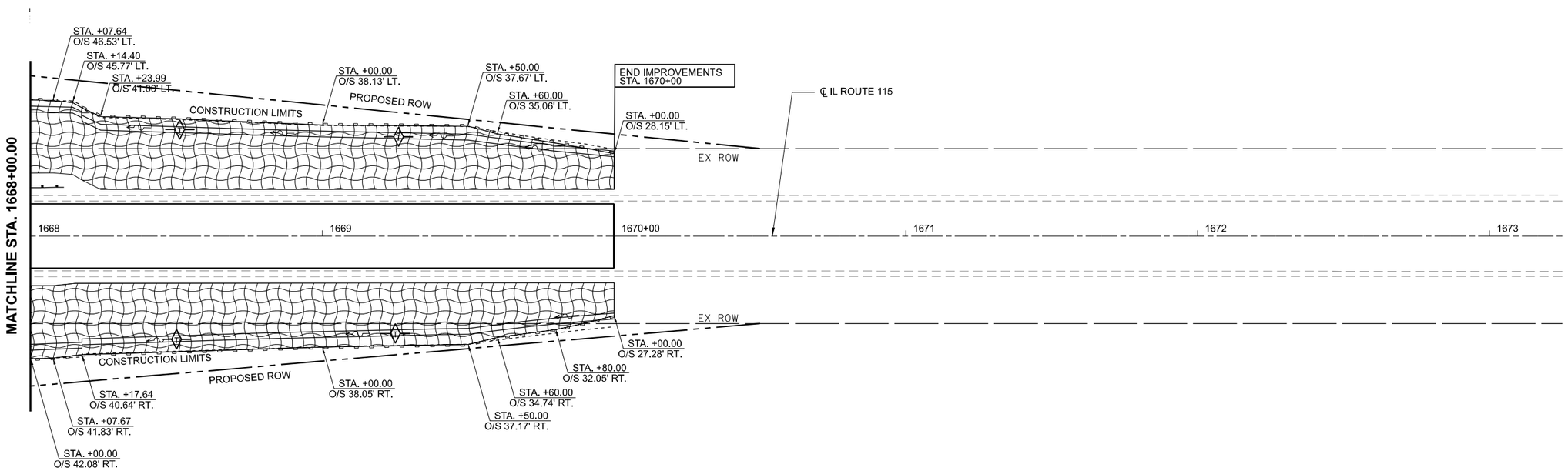

NOTES

1. ALL SEDIMENT AND EROSION CONTROL SYSTEMS SHALL BE CONSTRUCTED WITHIN THE RIGHT-OF-WAY OR PROPOSED RIGHT-OF-WAY.
2. ALL SEDIMENT AND EROSION CONTROL SYSTEMS SHALL BE INSPECTED WEEKLY AND WITHIN 24 HOURS AFTER EACH ½" OR GREATER RAIN EVENT.
3. ALL TEMPORARY DITCH CHECKS SHALL BE PLACED AT 100' SPACING UNLESS OTHERWISE NOTED.

LEGEND

- TEMPORARY EROSION CONTROL SEEDING, EROSION CONTROL BLANKET & SEEDING, CLASS 2A
- STONE RIPRAP, CLASS A4 & FILTER FABRIC
- TEMPORARY DITCH CHECK
- PERIMETER EROSION BARRIER
- DIRECTION OF DITCH FLOW

MODEL: ExBL-IL115 - Plan 4 [Sheet]
FILE NAME: Z:\Shared Projects\IDOT\IDOT-003-000/03_Design\02_CADD Sheets\WOM\D36B58-sht-ErosPLN_.dgn

OSEH inc. 10 W. VAN BUREN STREET SUITE 1020 CHICAGO, IL 60607 WWW.OSEHPC.COM

USER NAME = AsinatiAndrew	DESIGNED - AA	REVISED -	
	DRAWN - AA	REVISED -	
PLOT SCALE = 0.16666633 ' / in.	CHECKED - MM	REVISED -	
PLOT DATE = 2/24/2025	DATE - 2/24/2025	REVISED -	

STATE OF ILLINOIS
DEPARTMENT OF TRANSPORTATION

IL ROUTE 115
EROSION & SEDIMENT CONTROL PLAN

SCALE:1"=20' | SHEET OF SHEETS | STA. 1668+00.00 TO STA. 1673+00.00

F.A.P RTE.	SECTION	COUNTY	TOTAL SHEETS	SHEET NO.
796	(106BR-2)BR	FORD	55	20
		CONTRACT NO. 66B58		
	ILLINOIS	FED. AID PROJECT		

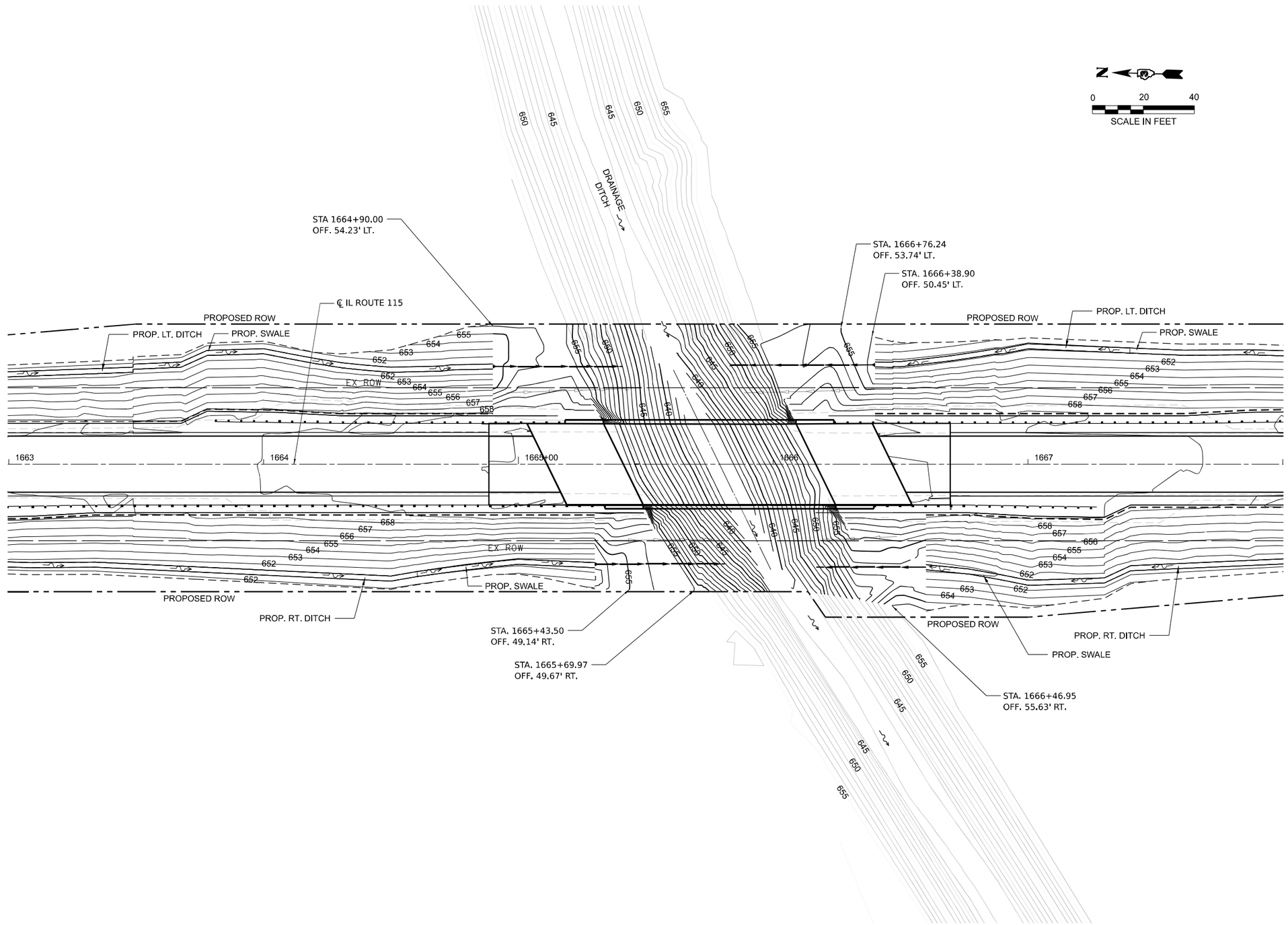

MODEL: ExBLuIL115 - Plan 3 [Sheet]
FILE NAME: Z:\Shared\Projects\IDOT\IDOT-003-000003_Design\02_CADD Sheets\WO#6\D3668B8-sht-GradingPlN.dgn

OSEH inc.
CONTRACT MULTI-MARKETING MEDIA
910 W. VAN BUREN STREET
SUITE 600
CHICAGO, IL 60607
WWW.OSEHINC.COM
(773) 750 - 6930

USER NAME = AlexDefrancesco	DESIGNED - AA	REVISED -
	DRAWN - AA	REVISED -
PLOT SCALE = 0.16666633 ' / in.	CHECKED - MM	REVISED -
PLOT DATE = 2/24/2025	DATE - 2/24/2025	REVISED -

STATE OF ILLINOIS
DEPARTMENT OF TRANSPORTATION

IL ROUTE 115
GRADING PLAN

SCALE: 1"=20' | SHEET 1 OF 1 SHEETS | STA. 1663+00.00 TO STA. 1668+00.00

F.A.P RTE.	SECTION	COUNTY	TOTAL SHEETS	SHEET NO.
796	(106BR-2)BR	FORD	55	21
		CONTRACT NO. 66B58		
		ILLINOIS	FED. AID PROJECT	

PART OF THE SE¼ SEC. 8, T. 27 N., R. 9 E. OF THE 3RD P.M.

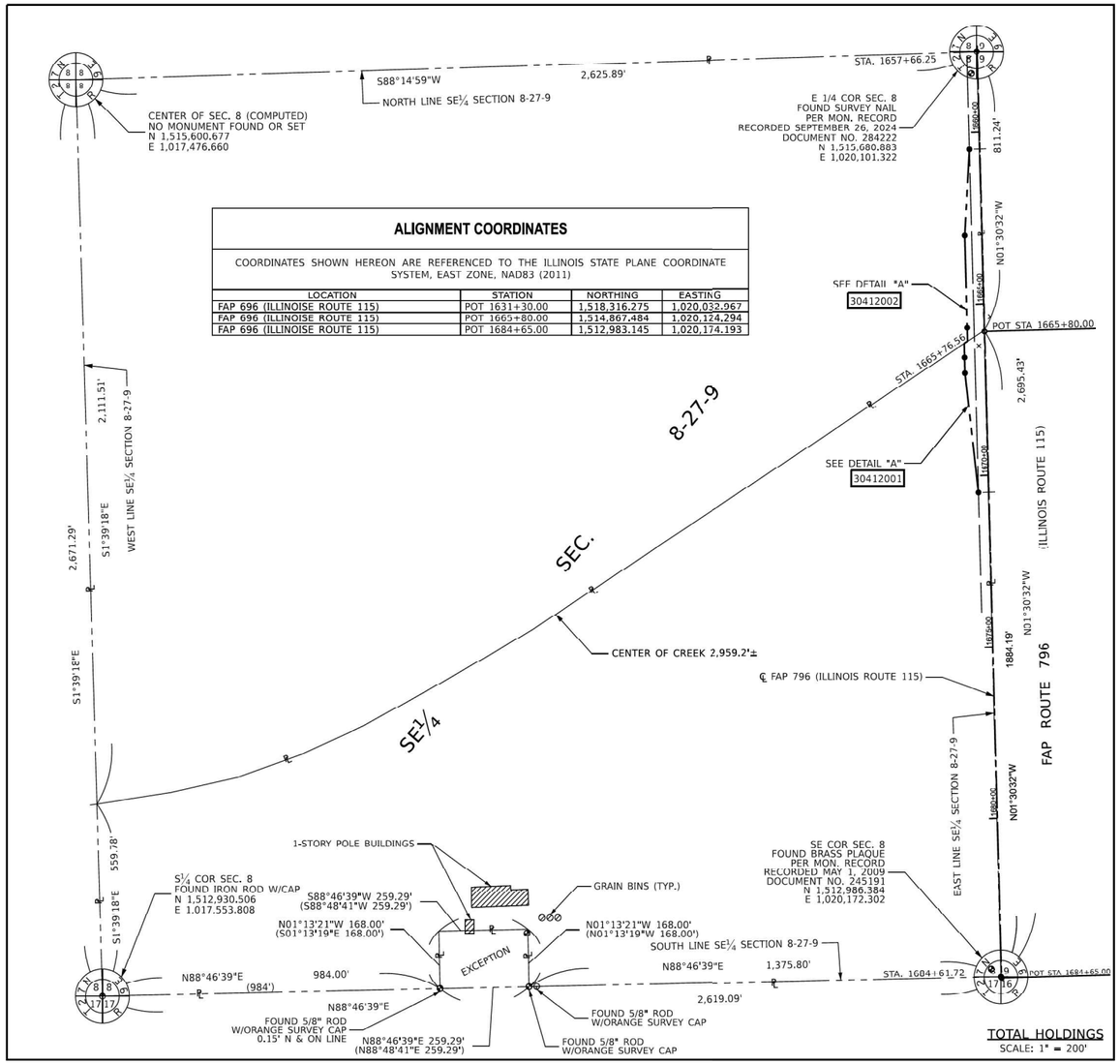

TOTAL HOLDINGS
SCALE: 1" = 200'

ALIGNMENT COORDINATES

COORDINATES SHOWN HEREON ARE REFERENCED TO THE ILLINOIS STATE PLANE COORDINATE SYSTEM, EAST ZONE, NAD83 (2011)

LOCATION	STATION	NORTHING	EASTING
FAP 696 (ILLINOISE ROUTE 115)	POT 1631+30.00	1,518,316.275	1,020,032.967
FAP 696 (ILLINOISE ROUTE 115)	POT 1665+80.00	1,514,867.484	1,020,124.294
FAP 696 (ILLINOISE ROUTE 115)	POT 1684+65.00	1,512,983.145	1,020,174.193

PROJECT COORDINATES

COORDINATES SHOWN HEREON ARE REFERENCED TO THE ILLINOIS STATE PLANE COORDINATE SYSTEM, EAST ZONE, NAD83 (2011)

PARCEL 30412001

PT. NO.	STATION	OFFSET	NORTHING	EASTING	MONUMENT
4151	1670+50.00	1.61' RT.	1,514,397.606	1,020,135.127	
4152	1670+50.00	30.00' RT.	1,514,396.855	1,020,106.746	SET 5/8" IRON ROD
4153	1667+00.00	60.00' RT.	1,514,745.938	1,020,067.492	SET 5/8" IRON ROD, 12" BELOW GRADE
4154	1666+14.05	60.00' RT.	1,514,831.857	1,020,065.216	IN CREEK
4155	1665+77.52	1.54' RT.	1,514,869.920	1,020,122.685	
4157	1666+54.05	60.00' RT.	1,514,791.871	1,020,066.275	SET 5/8" IRON ROD

PARCEL 30412002

PT. NO.	STATION	OFFSET	NORTHING	EASTING	MONUMENT
4155	1665+77.52	1.54' RT.	1,514,869.920	1,020,122.685	
4251	1666+07.80	50.00' RT.	1,514,838.369	1,020,075.048	IN CREEK
4252	1663+00.00	50.00' RT.	1,515,146.062	1,020,066.900	SET 5/8" IRON ROD, 12" BELOW GRADE
4253	1660+50.00	30.00' RT.	1,515,396.504	1,020,080.275	SET 5/8" IRON ROD
4254	1660+50.00	1.47' RT.	1,515,397.259	1,020,108.794	
4255	1665+67.80	50.00' RT.	1,514,878.355	1,020,073.989	SET 5/8" IRON ROD

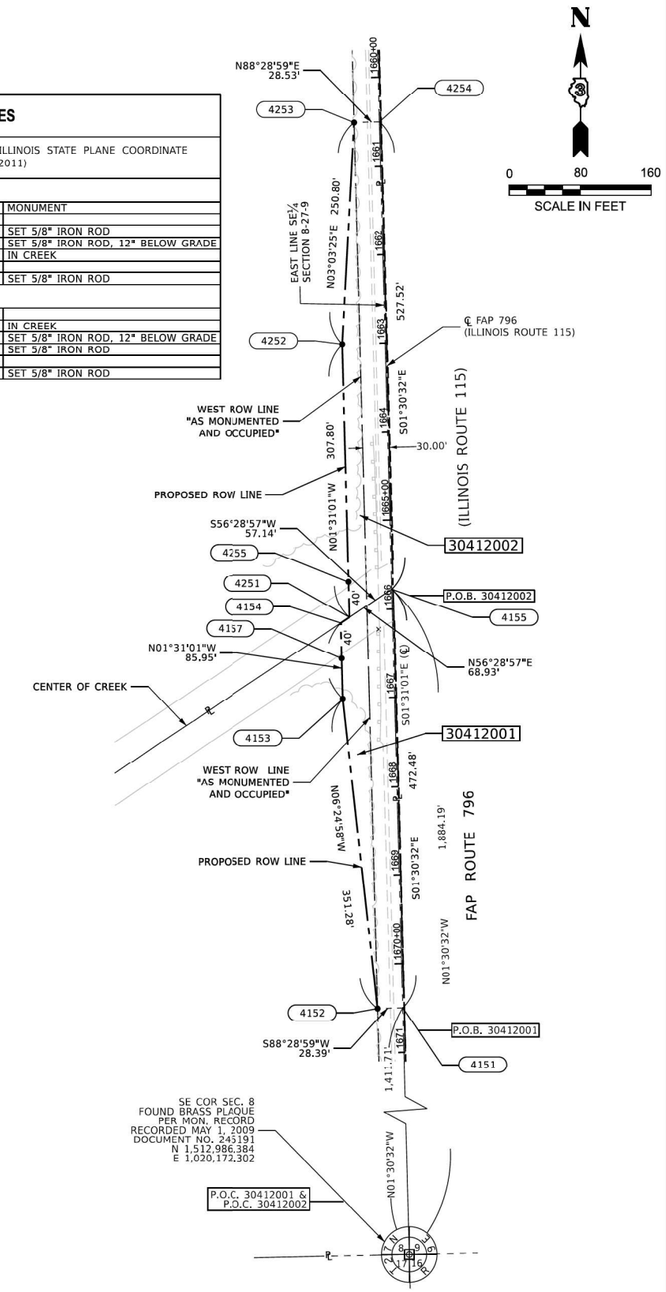

DETAIL "A"
SCALE: 1" = 80'

NOTE:
ALL DIMENSIONS ARE MEASURED UNLESS OTHERWISE SPECIFIED.
BEARINGS AND DISTANCES SHOWN HEREON ARE REFERENCED TO THE ILLINOIS STATE PLANE COORDINATE SYSTEM, EAST ZONE, (NAD 83, 2011 ADJ.).
ALL MEASURED AND CALCULATED DISTANCES ARE "GRID NOT "GROUND" TO OBTAIN GROUND DISTANCES, DIVIDE GRID DISTANCES BY THE COMBINATION FACTOR OF 0.99995010
AREAS SHOWN ON THIS PLAT ARE "GROUND".

I, JEFFERY S. ETSCHEID, HEREBY CERTIFY THAT I AM A PROFESSIONAL LAND SURVEYOR OF THE STATE OF ILLINOIS, THAT THE SURVEY OF IL. ROUTE 115 WAS MADE BY RENWICK & ASSOCIATES, INC. UNDER MY DIRECTION, AND THAT THE SURVEY IS TRUE AND COMPLETE AS SHOWN TO THE BEST OF MY KNOWLEDGE AND BELIEF, THAT ALL MONUMENTS AND MARKS ARE OF THE CHARACTER AND OCCUPY THE POSITION SHOWN THEREON, AND ARE SUFFICIENT TO ENABLE THE SURVEY TO BE RETRACED. THIS PROFESSIONAL SERVICE CONFORMS TO THE CURRENT ILLINOIS MINIMUM STANDARDS FOR A BOUNDARY SURVEY.

DATE: 10-08-2024

ILLINOIS PROFESSIONAL LAND SURVEYOR
NO. 35-3508

JEFFERY S. ETSCHEID
3508
PROFESSIONAL LAND SURVEYOR
STATE OF ILLINOIS
OTTAWA, ILLINOIS

SURVEY BOOK NO. FAP 796 (IL 115)

11-30-2024
EXPIRATION DATE

PARCEL NO.	TOTAL HOLDING*	PART TAKEN	AREA IN EXISTING R.O.W.	REMAINDER	EASEMENT AREA ACRES	EASEMENT AREA SQUARE FEET
30412001	65.802 AC.	0.489 AC. 21,286 SQ. FT.	0.302 AC. 13,176 SQ. FT.	65.313 AC.		
30412002	94.750 AC.	0.547 AC. 23,814 SQ. FT.	0.351 AC. 15,283 SQ. FT.	94.203 AC.		

*TOTAL HOLDING AREA BASED ON FIELD MEASURMENTS

Renwick & Associates, Inc.
Professional Engineers & Land Surveyors
1304 Gemini Circle, Suite 4 ▼ Ottawa, IL 61350
RWA JOB #23.205.1.4

USER NAME = MATTHEW MITCHELL	DESIGNED -	REVISED -	
	DRAWN - MM	REVISED -	
PLOT SCALE = 1" = 80'	CHECKED -	REVISED -	
PLOT DATE = 10/8/2024	DATE -	REVISED -	

STATE OF ILLINOIS
DEPARTMENT OF TRANSPORTATION

PLAT OF HIGHWAYS

SCALE: VARIES | SHEET 2 OF 3 SHEETS | STA. 1660+50 TO STA. 1670+50

F.A.P. RTE.	SECTION	COUNTY	TOTAL SHEETS	SHEET NO.
796	(106BR-2)BR	FORD	_	_
	R-93-004-12	CONTRACT NO. 66B58		
FED. ROAD DIST. NO.	ILLINOIS	FED. AID PROJECT		

OSEH inc.
100 W. VAN BUREN STREET
SUITE 401
CHICAGO, IL 60607
WWW.OSE-INC.COM

USER NAME = AlexDefrancesco	DESIGNED - AA	REVISED -	
	DRAWN - AA	REVISED -	
PLOT SCALE = 75.0000 ' / in.	CHECKED - MM	REVISED -	
PLOT DATE = 2/24/2025	DATE - 2/24/2025	REVISED -	

STATE OF ILLINOIS
DEPARTMENT OF TRANSPORTATION

IL ROUTE 115
PLAT OF HIGHWAYS

SCALE: 1"=50' | SHEET 1 OF 2 SHEETS | STA. TO STA.

F.A.P RTE.	SECTION	COUNTY	TOTAL SHEETS	SHEET NO.
796	(106BR-2)BR	FORD	55	22
	CONTRACT NO. 66B58			
	ILLINOIS	FED. AID PROJECT		

MODEL: Default
FILE NAME: Z:\Shared\Projects\D01\D01-003-000\03 Design\02 CADD Sheets\WO#6\D366858-4th-PLAT OF HIGHWAYS -1.dgn

THE S½ SEC. 9, T. 27 N., R. 9 E. OF THE 3RD P.M.

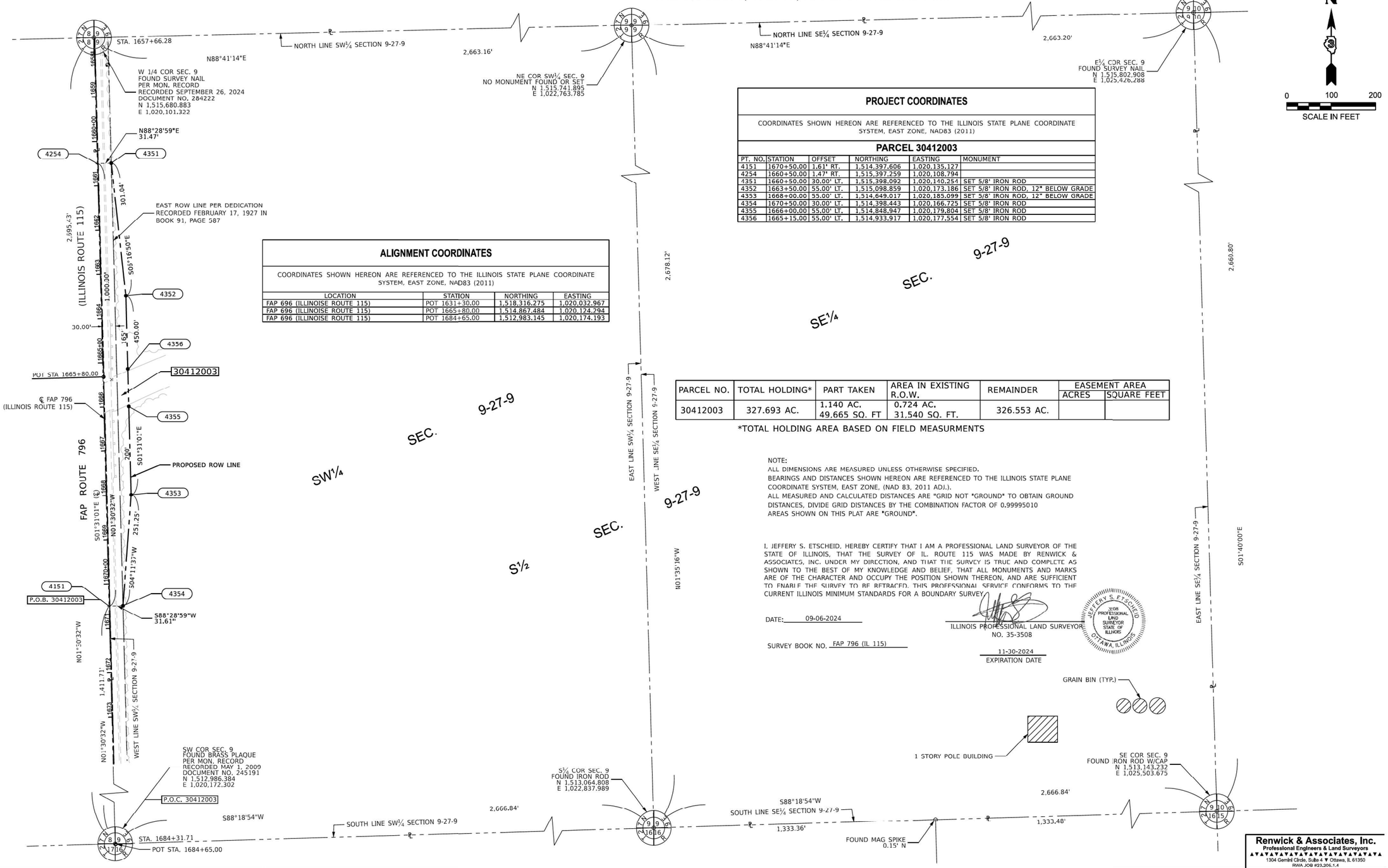

ALIGNMENT COORDINATES

COORDINATES SHOWN HEREON ARE REFERENCED TO THE ILLINOIS STATE PLANE COORDINATE SYSTEM, EAST ZONE, NAD83 (2011)

LOCATION	STATION	NORTHING	EASTING
FAP 696 (ILLINOISE ROUTE 115)	POT 1631+30.00	1,518,316.275	1,020,032.967
FAP 696 (ILLINOISE ROUTE 115)	POT 1665+80.00	1,514,867.484	1,020,124.294
FAP 696 (ILLINOISE ROUTE 115)	POT 1684+65.00	1,512,983.145	1,020,174.193

PROJECT COORDINATES

COORDINATES SHOWN HEREON ARE REFERENCED TO THE ILLINOIS STATE PLANE COORDINATE SYSTEM, EAST ZONE, NAD83 (2011)

PARCEL 30412003

PT. NO.	STATION	OFFSET	NORTHING	EASTING	MONUMENT
4151	1670+50.00	1.61' RT.	1,514,397.606	1,020,135.127	
4254	1660+50.00	1.47' RT.	1,515,397.259	1,020,108.794	
4351	1660+50.00	30.00' LT.	1,515,398.092	1,020,140.254	SET 5/8' IRON ROD
4352	1663+50.00	55.00' LT.	1,515,098.859	1,020,173.186	SET 5/8' IRON ROD, 12" BELOW GRADE
4353	1668+00.00	55.00' LT.	1,514,649.017	1,020,185.099	SET 5/8' IRON ROD, 12" BELOW GRADE
4354	1670+50.00	30.00' LT.	1,514,398.443	1,020,166.725	SET 5/8' IRON ROD
4355	1666+00.00	55.00' LT.	1,514,848.947	1,020,179.804	SET 5/8' IRON ROD
4356	1665+15.00	55.00' LT.	1,514,933.917	1,020,177.554	SET 5/8' IRON ROD

PARCEL NO.	TOTAL HOLDING*	PART TAKEN	AREA IN EXISTING R.O.W.	REMAINDER	EASEMENT AREA	
					ACRES	SQUARE FEET
30412003	327.693 AC.	1.140 AC. 49,665 SQ. FT	0.724 AC. 31,540 SQ. FT.	326.553 AC.		

*TOTAL HOLDING AREA BASED ON FIELD MEASURMENTS

NOTE:
ALL DIMENSIONS ARE MEASURED UNLESS OTHERWISE SPECIFIED.
BEARINGS AND DISTANCES SHOWN HEREON ARE REFERENCED TO THE ILLINOIS STATE PLANE COORDINATE SYSTEM, EAST ZONE, (NAD 83, 2011 ADJ.).
ALL MEASURED AND CALCULATED DISTANCES ARE "GRID NOT "GROUND" TO OBTAIN GROUND DISTANCES, DIVIDE GRID DISTANCES BY THE COMBINATION FACTOR OF 0.99995010
AREAS SHOWN ON THIS PLAT ARE "GROUND".

I, JEFFERY S. ETSCHEID, HEREBY CERTIFY THAT I AM A PROFESSIONAL LAND SURVEYOR OF THE STATE OF ILLINOIS, THAT THE SURVEY OF IL. ROUTE 115 WAS MADE BY RENWICK & ASSOCIATES, INC. UNDER MY DIRECTION, AND THAT THE SURVEY IS TRUE AND COMPLETE AS SHOWN TO THE BEST OF MY KNOWLEDGE AND BELIEF, THAT ALL MONUMENTS AND MARKS ARE OF THE CHARACTER AND OCCUPY THE POSITION SHOWN THEREON, AND ARE SUFFICIENT TO ENABLE THE SURVEY TO BE RETRACED. THIS PROFESSIONAL SERVICE CONFORMS TO THE CURRENT ILLINOIS MINIMUM STANDARDS FOR A BOUNDARY SURVEY.

DATE: 09-06-2024

SURVEY BOOK NO. FAP 796 (IL 115)

ILLINOIS PROFESSIONAL LAND SURVEYOR
NO. 35-3508

11-30-2024
EXPIRATION DATE

JEFFERY S. ETSCHEID
2108 PROFESSIONAL LAND SURVEYOR STATE OF ILLINOIS
OTTAWA, ILLINOIS

Renwick & Associates, Inc.
Professional Engineers & Land Surveyors
1304 Gemini Circle, Suite 4 ▼ Ottawa, IL 61350
RMA JOB #23.205.1.4

USER NAME = MATTHEW MITCHELL	DESIGNED -	REVISED -	
	DRAWN - MM	REVISED -	
PLOT SCALE = 1" = 100'	CHECKED -	REVISED -	
PLOT DATE = 10/8/2024	DATE -	REVISED -	

STATE OF ILLINOIS
DEPARTMENT OF TRANSPORTATION

PLAT OF HIGHWAYS

SCALE: 1" = 100' | SHEET 3 OF 3 SHEETS | STA. 1660+50 | TO STA. 1670+50

F.A.P. RTE.	SECTION	COUNTY	TOTAL SHEETS	SHEET NO.
796	(106BR-2)BR	FORD	_	_
	R-93-004-12	CONTRACT NO. 66B58		
FED. ROAD DIST. NO.	ILLINOIS	FED. AID PROJECT		

MODEL: Default
FILE NAME: Z:\Shared\Projects\01001D01-003-000\03 Design\02_CADD Sheets\WO#6103668658-sht-PLAT OF HIGHWAYS - 2.dgn

OSEH inc.
100 W. VAN BUREN STREET
SUITE 400
CHICAGO, IL 60607
WWW.OSEHINC.COM

USER NAME = AlexDefrancesco	DESIGNED - AA	REVISED -	
	DRAWN - AA	REVISED -	
PLOT SCALE = 75.0000 ' / in.	CHECKED - MM	REVISED -	
PLOT DATE = 2/24/2025	DATE - 2/24/2025	REVISED -	

STATE OF ILLINOIS
DEPARTMENT OF TRANSPORTATION

IL ROUTE 115
PLAT OF HIGHWAYS

SCALE: 1"=50' | SHEET 2 OF 2 SHEETS | STA. | TO STA.

F.A.P RTE.	SECTION	COUNTY	TOTAL SHEETS	SHEET NO.
796	(106BR-2)BR	FORD	55	23
		CONTRACT NO. 66B58		
	ILLINOIS	FED. AID PROJECT		

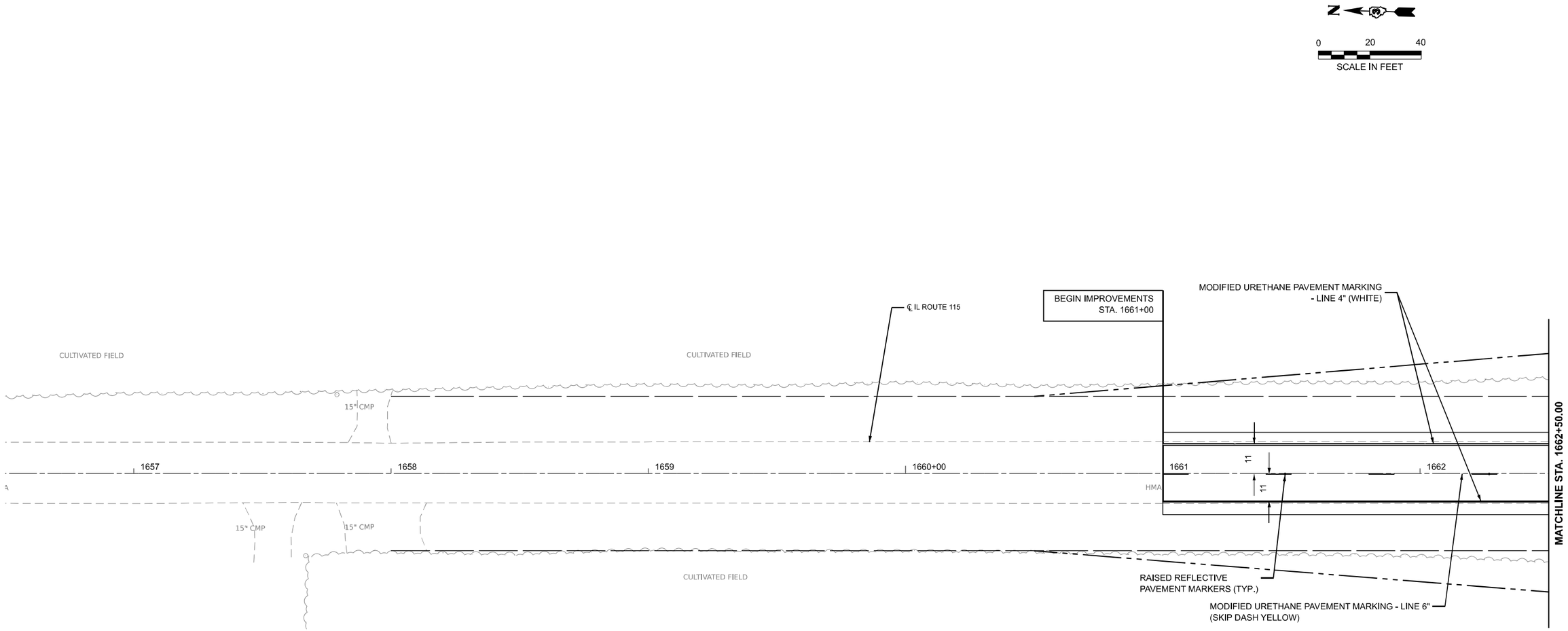

NOTES

1. THE PAVEMENT MARKING ON THIS PROJECT SHALL BE POLYUREA ON THE BRIDGE DECK AND BRIDGE APPROACH SLAB
2. THE CONTRACTOR SHALL MATCH THE EXISTING PAVEMENT MARKINGS AT THE PROJECT LIMITS AS NECESSARY.
3. QUANTITY FOR TWO (2) APPLICATIONS OF MODIFIED URETHANE AND POLYUREA PAVEMENT MARKINGS HAS BEEN INCLUDED AND IS REQUIRED TO AVOID SHORT TERM FADING.

MODEL: ExBL-IL115 - Plan 5[Sheet]
FILE NAME: Z:\Shared Projects\IDOT\IDOT-20-400\03_Design\02_CADD Sheets\WO#6\D36B58-pl-PvmntMarking.dgn

OSEH inc.
910 W. VAN BUREN STREET
SUITE 625
CHICAGO, IL 60607
WWW.OSEHINC.COM
CONTACT: MUTHANNA MOHAMMED (773) 751 - 6150

USER NAME = AsInat\Andrew	DESIGNED - AA	REVISED -	
	DRAWN - AA	REVISED -	
PLOT SCALE = 0.16666633 ' / in.	CHECKED - MM	REVISED -	
PLOT DATE = 2/24/2025	DATE - 2/24/2025	REVISED -	

STATE OF ILLINOIS
DEPARTMENT OF TRANSPORTATION

IL ROUTE 115
PAVEMENT MARKING PLAN

SCALE: 1"=20' | SHEET 1 OF 3 SHEETS | STA. 1657+00.00 TO STA. 1662+50.00

F.A.P RTE.	SECTION	COUNTY	TOTAL SHEETS	SHEET NO.
796	(106BR-2)BR	FORD	55	24
		CONTRACT NO. 66B58		
	ILLINOIS	FED. AID PROJECT		

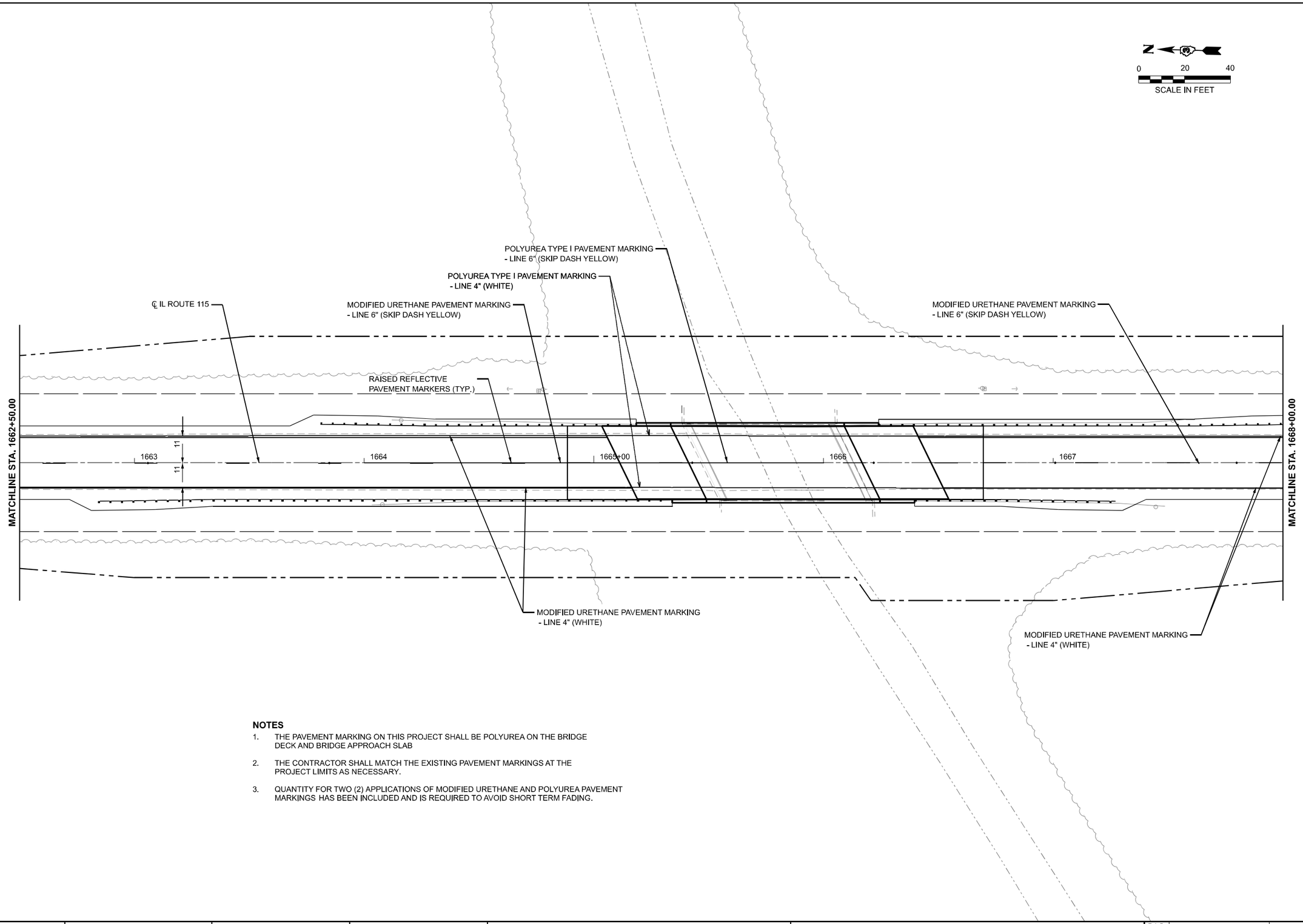

NOTES

1. THE PAVEMENT MARKING ON THIS PROJECT SHALL BE POLYUREA ON THE BRIDGE DECK AND BRIDGE APPROACH SLAB
2. THE CONTRACTOR SHALL MATCH THE EXISTING PAVEMENT MARKINGS AT THE PROJECT LIMITS AS NECESSARY.
3. QUANTITY FOR TWO (2) APPLICATIONS OF MODIFIED URETHANE AND POLYUREA PAVEMENT MARKINGS HAS BEEN INCLUDED AND IS REQUIRED TO AVOID SHORT TERM FADING.

MODEL: ExBL-IL115 - Plan 6 [Sheet]
FILE NAME: Z:\Shared Projects\IDOT\IDOT-003-000\03_Design\02_CADD Sheets\WO#6\D36B58-sh-PvmntMarking.dgn

OSEH inc.
CONTACT MUTHANNA MOHAMMED (773) 750 - 6930
9100 W. VAN BUREN STREET
SUITE 420
CHICAGO, IL 60607
WWW.OSEHINC.COM

USER NAME = AsInstl\Andrew	DESIGNED - AA	REVISED -	
	DRAWN - AA	REVISED -	
PLOT SCALE = 0.16666633 ' / in.	CHECKED - MM	REVISED -	
PLOT DATE = 2/24/2025	DATE - 2/24/2025	REVISED -	

STATE OF ILLINOIS
DEPARTMENT OF TRANSPORTATION

IL ROUTE 115
PAVEMENT MARKING PLAN

SCALE: 1"=20' | SHEET 2 OF 3 SHEETS | STA. 1662+50.00 TO STA. 1668+00.00

F.A.P RTE.	SECTION	COUNTY	TOTAL SHEETS	SHEET NO.
796	(106BR-2)BR	FORD	55	25

CONTRACT NO. 66B58

ILLINOIS | FED. AID PROJECT

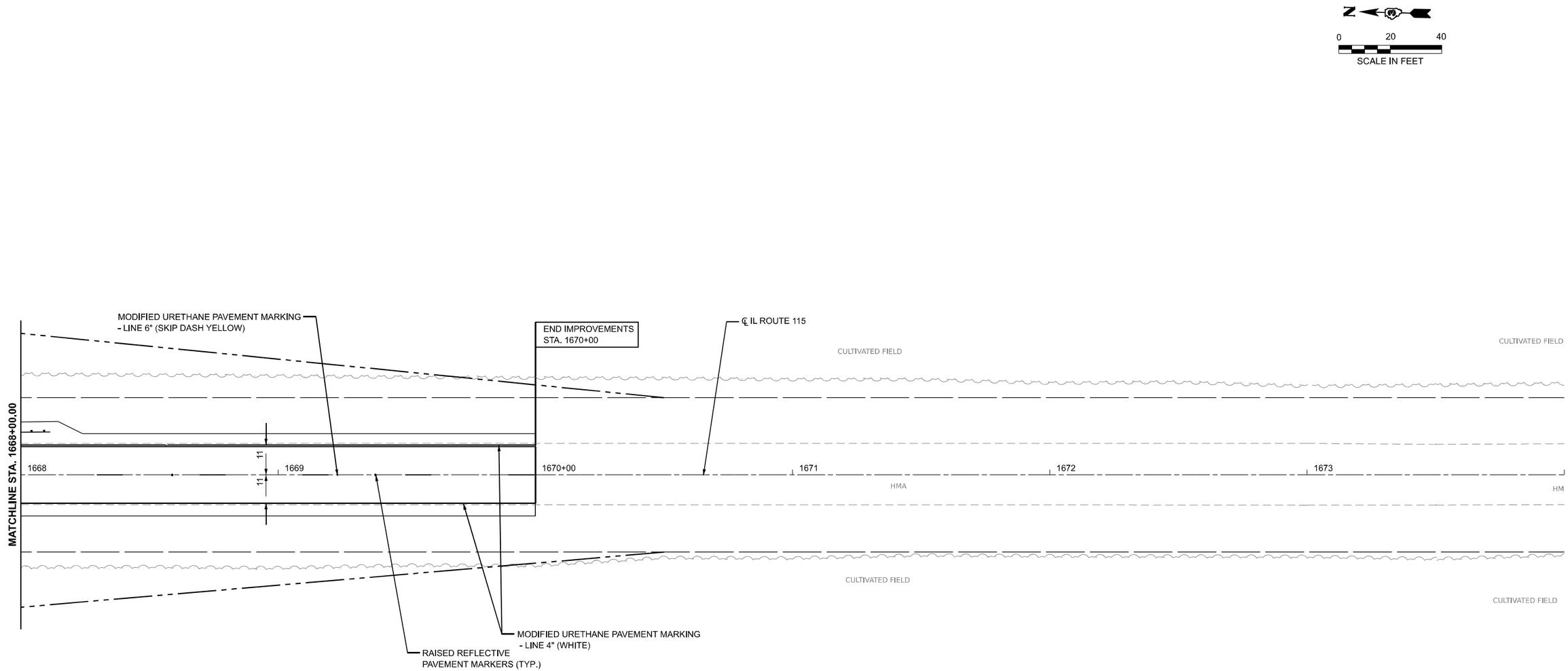

NOTES

1. THE PAVEMENT MARKING ON THIS PROJECT SHALL BE POLYUREA ON THE BRIDGE DECK AND BRIDGE APPROACH SLAB
2. THE CONTRACTOR SHALL MATCH THE EXISTING PAVEMENT MARKINGS AT THE PROJECT LIMITS AS NECESSARY.
3. QUANTITY FOR TWO (2) APPLICATIONS OF MODIFIED URETHANE AND POLYUREA PAVEMENT MARKINGS HAS BEEN INCLUDED AND IS REQUIRED TO AVOID SHORT TERM FADING.

MODEL: ExBL-IL115 - Plan 7 [Sheet]
FILE NAME: Z:\Shared Projects\IDOT\IDOT-20-400/03_Design\02_CADD Sheets\WO#6\D36B58-sht-PvmntMarking.dgn

OSEH inc.
310 W. VAN BUREN STREET
SUITE 625
CHICAGO, IL 60607
WWW.OSEHINC.COM
CONTACT: MUTHANNA MOHAMMED (773) 751 - 6910

USER NAME = AsInat\Andrew	DESIGNED - AA	REVISED -	
	DRAWN - AA	REVISED -	
PLOT SCALE = 0.16666633 ' / in.	CHECKED - MM	REVISED -	
PLOT DATE = 2/24/2025	DATE - 2/24/2025	REVISED -	

STATE OF ILLINOIS
DEPARTMENT OF TRANSPORTATION

IL ROUTE 115
PAVEMENT MARKING PLAN

SCALE: 1"=20' | SHEET 3 OF 3 SHEETS | STA. 1668+00.00 TO STA. 1673+50.00

F.A.P RTE.	SECTION	COUNTY	TOTAL SHEETS	SHEET NO.
796	(106BR-2)BR	FORD	55	26
		CONTRACT NO. 66B58		
	ILLINOIS	FED. AID PROJECT		

Benchmark: BM 2 - R.R. Spike in Telephone Pole at N.E. quadrant of S.N. 027-0074. Elev. 655.348

Existing Structure: S.N. 027-0074 constructed as F.A. Route 796 in 1981 under Sec. 106BR-2 at Station 1665+79. The existing structure consists of a single span with 27" P.P.C. deck beams resting on bearing pads. A bituminous overlay with Waterproofing Membrane System is provided on top of the beams. The structure is skewed 26°00'00" and is 69'-0" back-to-back abutments with a 32'-4" width measured face-to-face of railing. Substructure consists of concrete spill-thru abutments supported on concrete piles. Resurfacing was completed in 2000 under Sec. 106-RS-2.

Traffic to be detoured during construction.

No salvage.

WATERWAY INFORMATION

Drainage Area = 11.4 sq. mi.

Existing Overtopping Elev. 657.40 @ Sta. 1661+00
Proposed Overtopping Elev. 657.40 @ Sta. 1661+00

Flood Event	Freq. Yr.	Q C.F.S.	Opening Sq. Ft. Exist.	Opening Sq. Ft. Prop.	Nat. H.W.E.	Head - Ft. Exist.	Head - Ft. Prop.	Headwater El. Exist.	Headwater El. Prop.
	10	368	317	328	652.1	0.0	0.0	652.1	652.1
Design	50	548	427	442	654.1	0.0	0.0	654.1	654.1
Base	100	623	466	486	654.9	0.0	0.0	654.9	654.9
Scour Check	200	699	467	526	655.5	0.0	0.0	655.5	655.5
Max. Calc.	500	799	467	553	656.0	0.1	0.0	656.0	656.0

10 Year Velocity Through Existing Bridge = 1.2 ft/s
10 Year Velocity Through Proposed Bridge = 1.1 ft/s

DESIGN SCOUR ELEVATION TABLE

Event / Limit State	Design Scour Elevations (ft.) N. Abut.	S. Abut.	Item 113
Q100	652.75	652.75	8
Q200	652.75	652.75	
Design	652.75	652.75	
Check	652.75	652.75	

LOADING HL-93

Allow 50#/sq. ft. for future wearing surface.

DESIGN SPECIFICATIONS

2020 AASHTO LRFD Bridge Design Specifications, 9th Edition

DESIGN STRESSES

FIELD UNITS

f'c = 3,500 psi
f'c = 4,000 psi (Superstructure Concrete)
fy = 60,000 psi (Reinforcement)

PRECAST PRESTRESSED UNITS

f'c = 8,500 psi
f'ci = 6,500 psi
fpu = 270,000 psi (0.6"⌀ low lax. strands)
fpbt = 202,300 psi (0.6"⌀ low lax. strands)

SEISMIC DATA

Seismic Performance Zone (SPZ) = 1
Design Spectral Acceleration at 1.0 sec. (S_{D1}) = 0.110g
Design Spectral Acceleration at 0.2 sec. (S_{DS}) = 0.179g
Soil Site Class = D

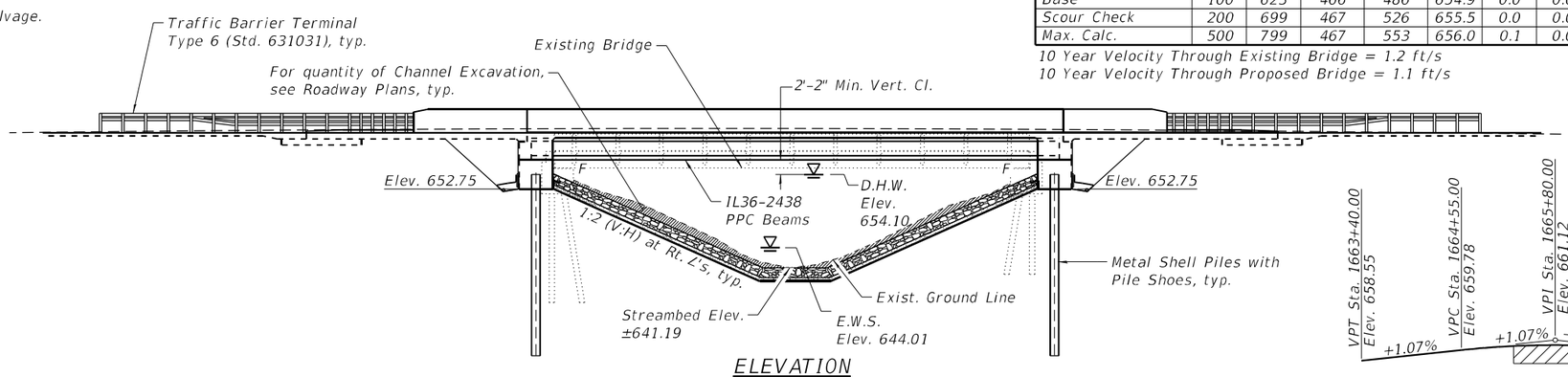

ELEVATION

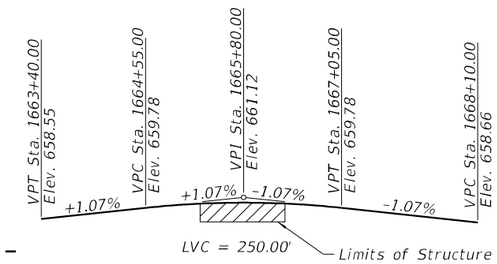

PROPOSED PROFILE GRADE

(Along ℄ IL 115)

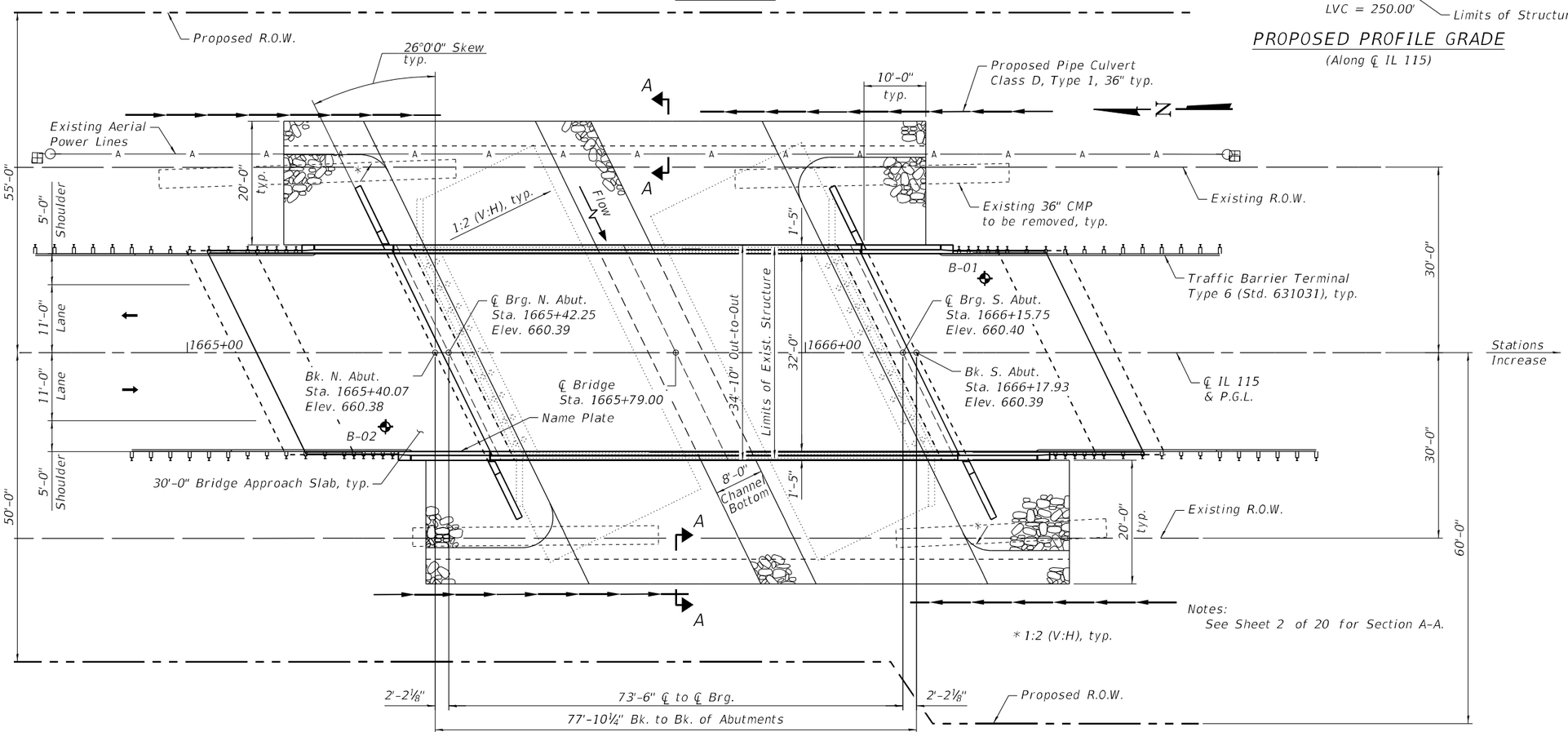

PLAN

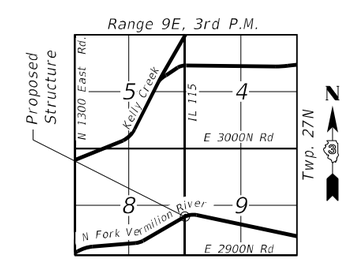

LOCATION SKETCH

BRAD N. SAVERS 081-060267 LICENSED STRUCTURAL ENGINEER OF ILLINOIS

BY: [signature] DATE: 2/13/2025
HDR ENGINEERING, INC.
DWGS BRIDGE SHEETS 1 TO 20 OF 20
LICENSE EXPIRES NOV. 30, 2026

APPROVED
For Structural Adequacy Only
[signature]
Engineer of Bridges & Structures

GENERAL PLAN AND ELEVATION
IL RTE. 115 OVER NORTH FORK
OF VERMILION RIVER TRIBUTARY
F.A.P. 796
SEC. (106BR-2) BR
FORD COUNTY
STATION 1665+79.00
STRUCTURE NO. 027-0105

HDR ENGINEERING, INC.
9450 W. BRYN MAWR AVE.
ROSEMONT, IL 60018

USER NAME =	DESIGNED – AMN	REVISED –
	CHECKED – WL	REVISED –
PLOT SCALE =	DRAWN – AMN	REVISED –
PLOT DATE = 2/13/2025	CHECKED – WL	REVISED –

STATE OF ILLINOIS
DEPARTMENT OF TRANSPORTATION

GENERAL PLAN AND ELEVATION
STRUCTURE NO. 027-0105

SHEET 1 OF 20 SHEETS

F.A.P. RTE.	SECTION	COUNTY	TOTAL SHEETS	SHEET NO.
796	(106BR-2)BR	FORD	55	27
		CONTRACT NO. 66B58		
		ILLINOIS FED. AID PROJECT		

MODEL: Default
FILE NAME: pw:\\pwidusczen01:HDR_US_Central_01\Documents\ILDOT\OSEH_IDOT_IL115_Br_Replac_WO_6\6.0_CAD_BIM\6.2_WIP\6.2.3_CADD Sheet\Structures_HDR\General Plan And Elevation
2/13/2025 1:30:02 PM

GENERAL NOTES

Reinforcement bars designated (E) shall be epoxy coated.

Layout of the slope protection system may be varied to suit ground conditions in the field as directed by the Engineer.

The embankment configuration shown shall be the minimum that must be placed and compacted prior to construction of the abutments.

INDEX OF SHEETS

TOTAL BILL OF MATERIAL

ITEM	UNIT	SUPER	SUB	TOTAL
Stone Riprap, Class A4	Sq. Yd.		798	798
Filter Fabric	Sq. Yd.		798	798
Removal of Existing Structures	Each	1		1
Structure Excavation	Cu. Yd.		158	158
Concrete Structures	Cu. Yd.		71.9	71.9
Concrete Superstructures	Cu. Yd.	125.5		125.5
Bridge Deck Grooving	Sq. Yd.	453		453
Protective Coat	Sq. Yd.	579		579
Concrete Superstructure (Approach Slab)	Cu. Yd.	97.2		97.2
Furnishing and Erecting Precast Prestressed Beams, IL36N	Foot	448.5		448.5
Reinforcement Bars, Epoxy Coated	Pound	59,510	12,550	72,060
Furnishing Metal Shell Piles 14" x 0.312"	Foot		310	310
Driving Piles	Foot		310	310
Test Pile Metal Shells	Each		2	2
Pile Shoes	Each		12	12
Name Plates	Each	1		1
Granular Backfill for Structures	Cu. Yd.		131	131
Geocomposite Wall Drain	Sq. Yd.		78	78
Pipe Underdrains for Structures 4"	Foot		124	124
Bar Terminators	Each	72	336	408

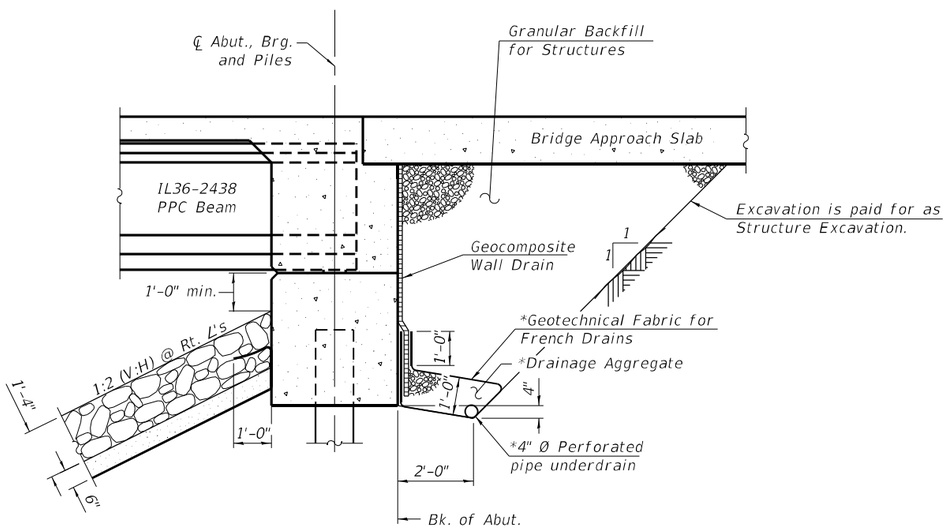

SECTION THRU INTEGRAL ABUTMENT

(Horiz. dim. @ Rt. ∠'s)

*Included in the cost of Pipe Underdrains for Structures.

Note:
All drainage system components shall extend to 2'-0" from the end of each wingwall except an outlet pipe shall extend until intersecting with the side slopes. The pipes shall drain into concrete headwalls. (See Article 601.05 of the Standard Specifications and Highway Standard 601101).

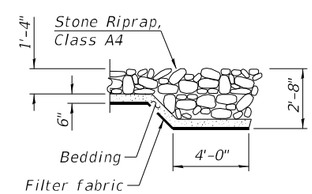

SECTION A-A

STA. 1665+79.00
BUILT 20 BY
STATE OF ILLINOIS
F.A.P. Rt. 796
Sec. (106BR-2) BR
LOADING HL-93
STR. NO. 027-0105

NAME PLATE

See Std. 515001

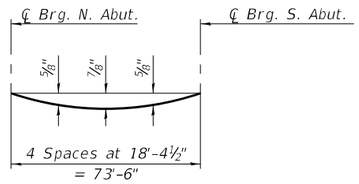

DEAD LOAD DEFLECTION DIAGRAM

(Includes weight of concrete, excluding beams).

Note:
The above deflections are not to be used in the field if the engineer is working from the grade elevations adjusted for dead load deflections as shown on sheet 4 of 20.

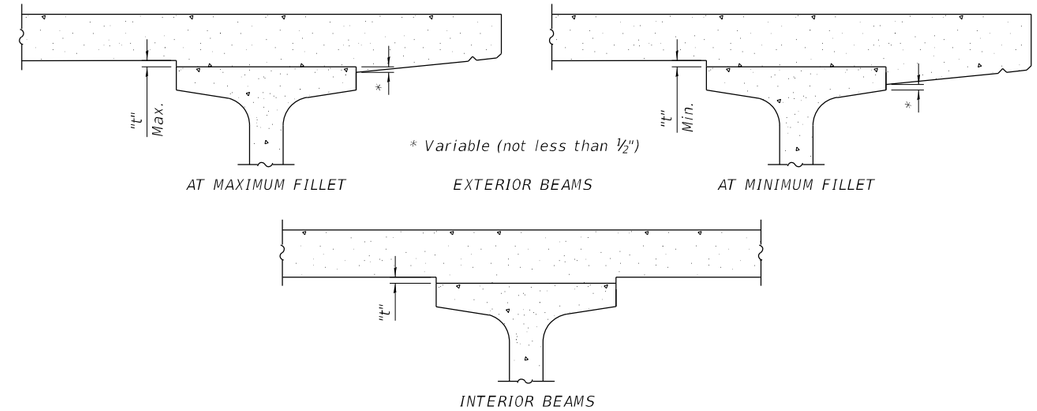

To determine "t": After all precast prestressed beams have been erected, elevations of the top flanges of the beams shall be taken at intervals shown below. These elevations subtracted from the "Theoretical Grade Elevations Adjusted for Dead Load Deflections" shown on sheet 4 of 20, minus slab thickness, equals the fillet heights "t" above top flanges of beams.

FILLET HEIGHTS

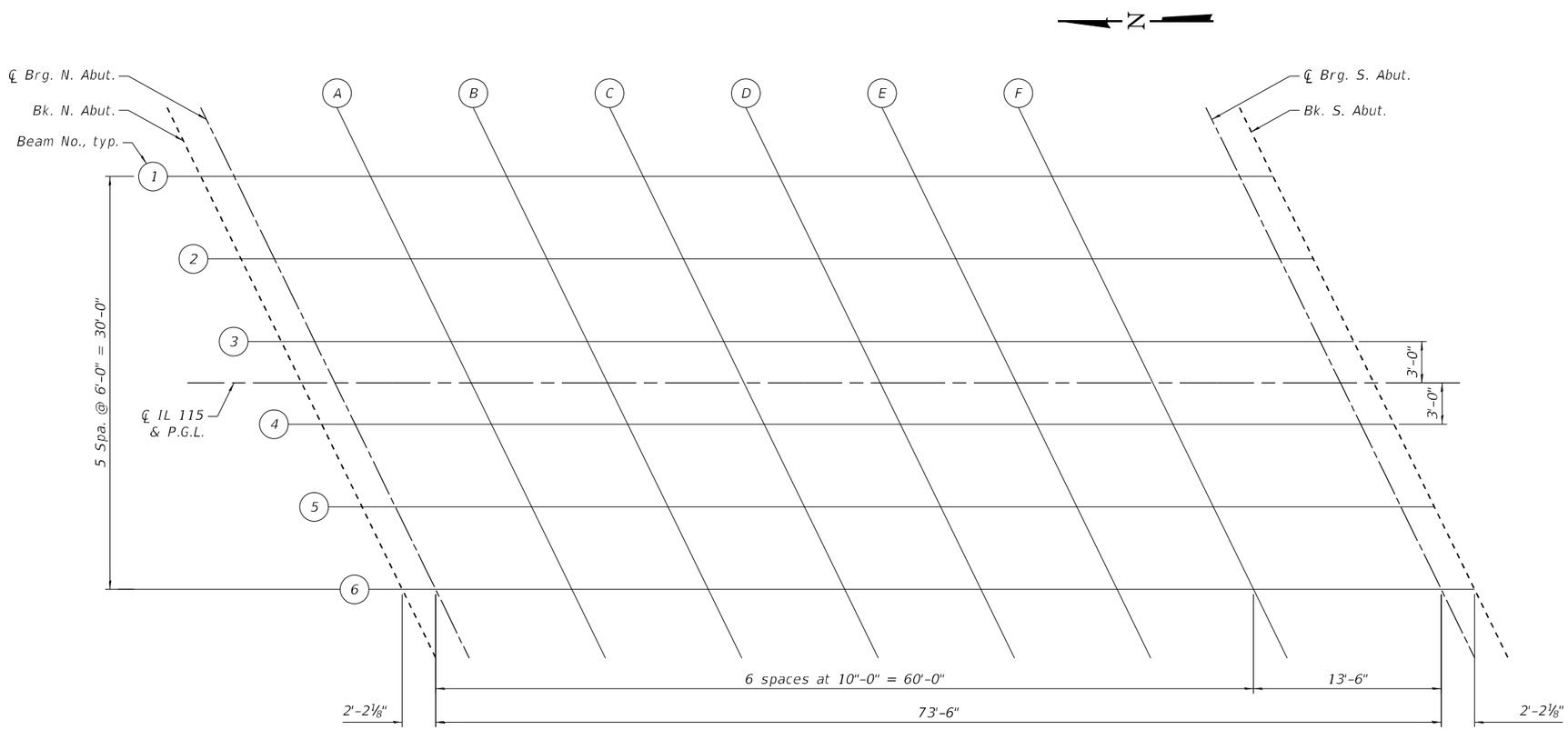

PLAN

OSEH inc. 910 W. VAN BUREN ST SUITE 603 CHICAGO, IL 60607 WWW.OSEHINC.COM	USER NAME =	DESIGNED – FL	REVISED –	STATE OF ILLINOIS DEPARTMENT OF TRANSPORTATION	TOP OF SLAB ELEVATIONS STRUCTURE NO. 027-0105
		CHECKED – AD	REVISED –		
	PLOT SCALE =	DRAWN – FL	REVISED –		
	PLOT DATE = 2/13/2025	CHECKED – WL	REVISED –		SHEET 3 OF 20 SHEETS

F.A.P. RTE.	SECTION	COUNTY	TOTAL SHEETS	SHEET NO.
796	(106BR-2)BR	FORD	55	29
		CONTRACT NO. 66B58		
		ILLINOIS FED. AID PROJECT		

MODEL: Default
FILE NAME: pw:\\pwtdruscen01:HDR_US_Central_01\Documents\ILDOT\OSEH_IDOT_IL115_Br_Replac_WO_6\6.0_CAD_BIM\6.2_VIP\6.2.3_CADD Sheet\Structures_OSEH\0161669-62723-XX-TOP-SLAB1.dgn
2/13/2025 10:47:27 AM

BEAM 1

Location	Station	Offset	Theoretical Grade Elevations	Theoretical Grade Elevations Adjusted For Dead Load Deflection
Bk. N. Abut.	1665+32.76	-15.00	660.11	660.11
℄ Brg. N. Abut.	1665+34.94	-15.00	660.12	660.12
A	1665+44.94	-15.00	660.16	660.18
B	1665+54.94	-15.00	660.18	660.23
C	1665+64.94	-15.00	660.20	660.26
D	1665+74.94	-15.00	660.21	660.27
E	1665+84.94	-15.00	660.21	660.27
F	1665+94.94	-15.00	660.20	660.24
℄ Brg. S. Abut.	1666+08.43	-15.00	660.17	660.17
Bk. S. Abut.	1666+10.61	-15.00	660.17	660.17

BEAM 2

Location	Station	Offset	Theoretical Grade Elevations	Theoretical Grade Elevations Adjusted For Dead Load Deflection
Bk. N. Abut.	1665+35.68	-9.00	660.23	660.23
℄ Brg. N. Abut.	1665+37.86	-9.00	660.24	660.24
A	1665+47.86	-9.00	660.27	660.30
B	1665+57.86	-9.00	660.30	660.35
C	1665+67.86	-9.00	660.31	660.38
D	1665+77.86	-9.00	660.32	660.39
E	1665+87.86	-9.00	660.32	660.37
F	1665+97.86	-9.00	660.30	660.34
℄ Brg. S. Abut.	1666+11.36	-9.00	660.28	660.28
Bk. S. Abut.	1666+13.54	-9.00	660.27	660.27

BEAM 3

Location	Station	Offset	Theoretical Grade Elevations	Theoretical Grade Elevations Adjusted For Dead Load Deflection
Bk. N. Abut.	1665+38.61	-3.00	660.33	660.33
℄ Brg. N. Abut.	1665+40.78	-3.00	660.34	660.34
A	1665+50.78	-3.00	660.37	660.40
B	1665+60.78	-3.00	660.39	660.45
C	1665+70.78	-3.00	660.40	660.47
D	1665+80.78	-3.00	660.41	660.48
E	1665+90.78	-3.00	660.40	660.46
F	1666+00.78	-3.00	660.39	660.43
℄ Brg. S. Abut.	1666+14.29	-3.00	660.36	660.36
Bk. S. Abut.	1666+16.47	-3.00	660.35	660.35

℄ IL 115 AND P.G.L.

Location	Station	Offset	Theoretical Grade Elevations	Theoretical Grade Elevations Adjusted For Dead Load Deflection
Bk. N. Abut.	1665+40.07	0.00	660.38	660.38
℄ Brg. N. Abut.	1665+42.25	0.00	660.39	660.39
A	1665+52.25	0.00	660.42	660.45
B	1665+62.25	0.00	660.44	660.49
C	1665+72.25	0.00	660.45	660.51
D	1665+82.25	0.00	660.45	660.52
E	1665+92.25	0.00	660.44	660.50
F	1666+02.25	0.00	660.43	660.47
℄ Brg. S. Abut.	1666+15.75	0.00	660.39	660.39
Bk. S. Abut.	1666+17.93	0.00	660.39	660.39

BEAM 4

Location	Station	Offset	Theoretical Grade Elevations	Theoretical Grade Elevations Adjusted For Dead Load Deflection
Bk. N. Abut.	1665+41.53	3.00	660.35	660.35
℄ Brg. N. Abut.	1665+43.71	3.00	660.36	660.36
A	1665+53.71	3.00	660.38	660.40
B	1665+63.71	3.00	660.40	660.45
C	1665+73.71	3.00	660.41	660.47
D	1665+83.71	3.00	660.41	660.47
E	1665+93.71	3.00	660.40	660.46
F	1666+03.71	3.00	660.38	660.42
℄ Brg. S. Abut.	1666+17.22	3.00	660.35	660.35
Bk. S. Abut.	1666+19.39	3.00	660.34	660.34

BEAM 5

Location	Station	Offset	Theoretical Grade Elevations	Theoretical Grade Elevations Adjusted For Dead Load Deflection
Bk. N. Abut.	1665+44.46	9.00	660.27	660.27
℄ Brg. N. Abut.	1665+46.64	9.00	660.27	660.27
A	1665+56.64	9.00	660.29	660.32
B	1665+66.64	9.00	660.31	660.36
C	1665+76.64	9.00	660.32	660.38
D	1665+86.64	9.00	660.32	660.39
E	1665+96.64	9.00	660.31	660.37
F	1666+06.64	9.00	660.29	660.33
℄ Brg. S. Abut.	1666+20.14	9.00	660.25	660.25
Bk. S. Abut.	1666+22.32	9.00	660.24	660.24

BEAM 6

Location	Station	Offset	Theoretical Grade Elevations	Theoretical Grade Elevations Adjusted For Dead Load Deflection
Bk. N. Abut.	1665+47.39	15.00	660.16	660.16
℄ Brg. N. Abut.	1665+49.57	15.00	660.17	660.17
A	1665+59.57	15.00	660.19	660.22
B	1665+69.57	15.00	660.20	660.26
C	1665+79.57	15.00	660.21	660.27
D	1665+89.57	15.00	660.20	660.27
E	1665+99.57	15.00	660.19	660.25
F	1666+09.57	15.00	660.17	660.21
℄ Brg. S. Abut.	1666+23.07	15.00	660.13	660.13
Bk. S. Abut.	1666+25.25	15.00	660.12	660.12

EAST EDGE OF SHOULDER

Location	Station	Offset	Theoretical Grade Elevations
N. End of N. Appr. Slab	1665+03.38	-16.00	659.94
A1	1665+13.38	-16.00	660.00
A2	1665+23.38	-16.00	660.05
S. End of N. Appr. Slab	1665+33.38	-16.00	660.09

EAST EDGE OF PAVEMENT

Location	Station	Offset	Theoretical Grade Elevations
N. End of N. Appr. Slab	1665+05.82	-11.00	660.05
A1	1665+15.82	-11.00	660.11
A2	1665+25.82	-11.00	660.16
S. End of N. Appr. Slab	1665+35.82	-11.00	660.20

℄ IL 115 AND P.G.L.

Location	Station	Offset	Theoretical Grade Elevations
N. End of N. Appr. Slab	1665+11.18	0.00	660.25
A1	1665+21.18	0.00	660.30
A2	1665+31.18	0.00	660.35
S. End of N. Appr. Slab	1665+41.18	0.00	660.39

WEST EDGE OF PAVEMEMT

Location	Station	Offset	Theoretical Grade Elevations
N. End of N. Appr. Slab	1665+16.55	11.00	660.12
A1	1665+26.55	11.00	660.17
A2	1665+36.55	11.00	660.21
S. End of N. Appr. Slab	1665+46.55	11.00	660.24

WEST EDGE OF SHOULDER

Location	Station	Offset	Theoretical Grade Elevations
N. End of N. Appr. Slab	1665+18.99	16.00	660.03
A1	1665+28.99	16.00	660.08
A2	1665+38.99	16.00	660.12
S. End of N. Appr. Slab	1665+48.99	16.00	660.15

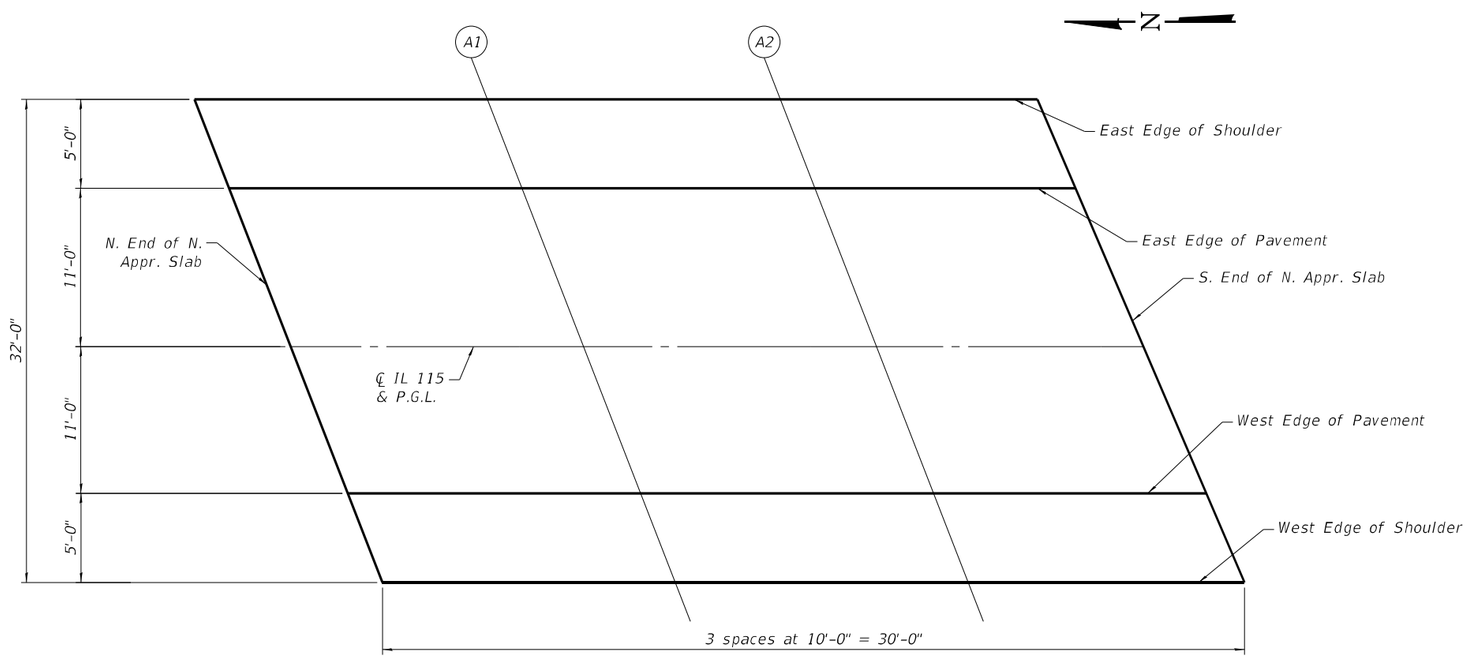

PLAN
(North Approach)

MODEL: Default
FILE NAME: pw:\\pwhdrusceu01:HDR_US_Central_01\Documents\ILDOT\OSEH_IDOT_IL115_Br_Replac_WO_616.0_CAD_BIM\6.2_WIP\6.2.3_CADD Sheet\Structures_OSEH\0161669-62723-XX-TOP-N-A-SLAB.dgn

OSEH inc.
910 W. VAN BUREN ST
SUITE 603
CHICAGO, IL 60607
WWW.OSEHINC.COM

USER NAME =	DESIGNED – FL	REVISED –	
	CHECKED – AD	REVISED –	
PLOT SCALE =	DRAWN – FL	REVISED –	
PLOT DATE = 2/13/2025	CHECKED – WL	REVISED –	

STATE OF ILLINOIS
DEPARTMENT OF TRANSPORTATION

TOP OF NORTH APPROACH SLAB ELEVATIONS
STRUCTURE NO. 027-0105

SHEET 5 OF 20 SHEETS

F.A.P. RTE.	SECTION	COUNTY	TOTAL SHEETS	SHEET NO.
796	(106BR-2)BR	FORD	55	31
		CONTRACT NO. 66B58		
		ILLINOIS FED. AID PROJECT		

2/13/2025 10:47:37 AM

EAST EDGE OF SHOULDER

Location	Station	Offset	Theoretical Grade Elevations
N. End of S. Appr. Slab	1666+09.01	-16.00	660.15
A3	1666+19.01	-16.00	660.12
A4	1666+29.01	-16.00	660.09
S. End of S. Appr. Slab	1666+39.01	-16.00	660.04

EAST EDGE OF PAVEMENT

Location	Station	Offset	Theoretical Grade Elevations
N. End of S. Appr. Slab	1666+11.45	-11.00	660.25
A3	1666+21.45	-11.00	660.21
A4	1666+31.45	-11.00	660.18
S. End of S. Appr. Slab	1666+41.45	-11.00	660.13

℄ IL 115 AND P.G.L.

Location	Station	Offset	Theoretical Grade Elevations
N. End of S. Appr. Slab	1666+16.82	0.00	660.40
A3	1666+26.82	0.00	660.36
A4	1666+36.82	0.00	660.32
S. End of S. Appr. Slab	1666+46.82	0.00	660.26

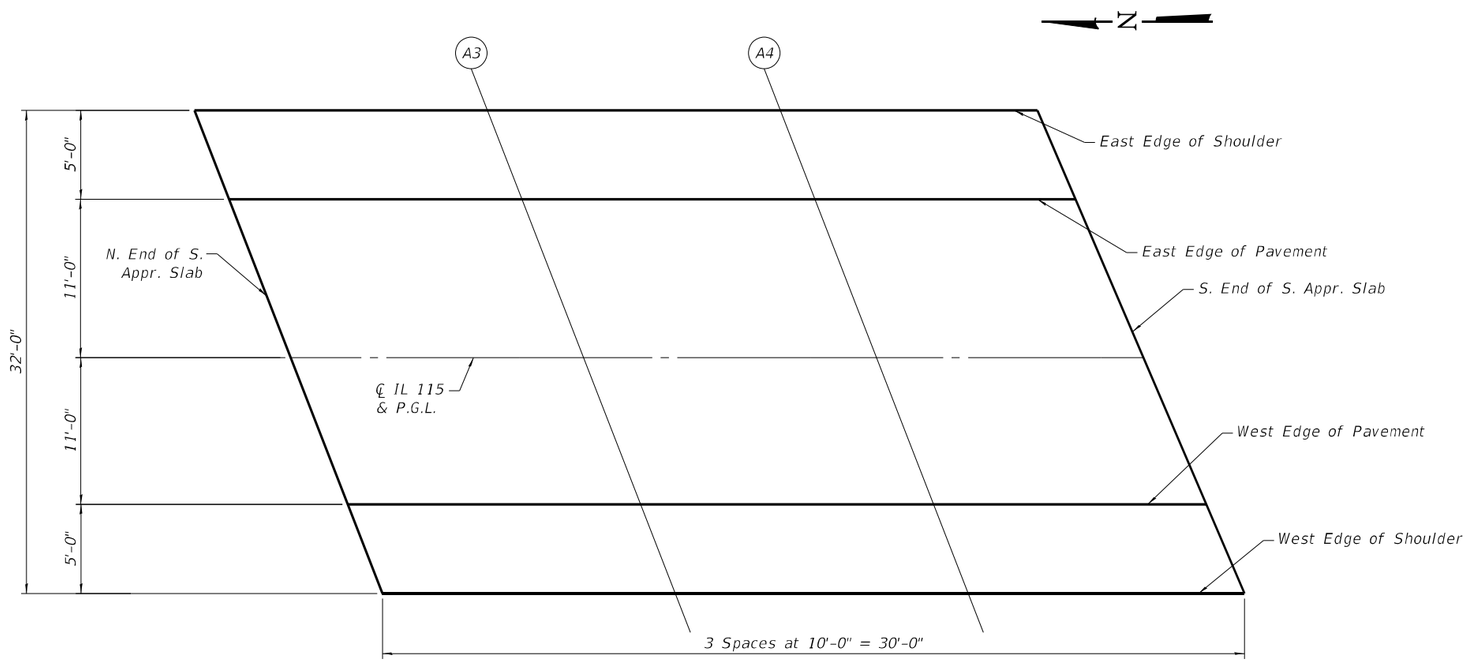

PLAN
(South Approach)

WEST EDGE OF PAVEMEMT

Location	Station	Offset	Theoretical Grade Elevations
N. End of S. Appr. Slab	1666+22.18	11.00	660.21
A3	1666+32.18	11.00	660.17
A4	1666+42.18	11.00	660.12
S. End of S. Appr. Slab	1666+52.18	11.00	660.07

WEST EDGE OF SHOULDER

Location	Station	Offset	Theoretical Grade Elevations
N. End of S. Appr. Slab	1666+24.62	16.00	660.10
A3	1666+34.62	16.00	660.06
A4	1666+44.62	16.00	660.01
S. End of S. Appr. Slab	1666+54.62	16.00	659.95

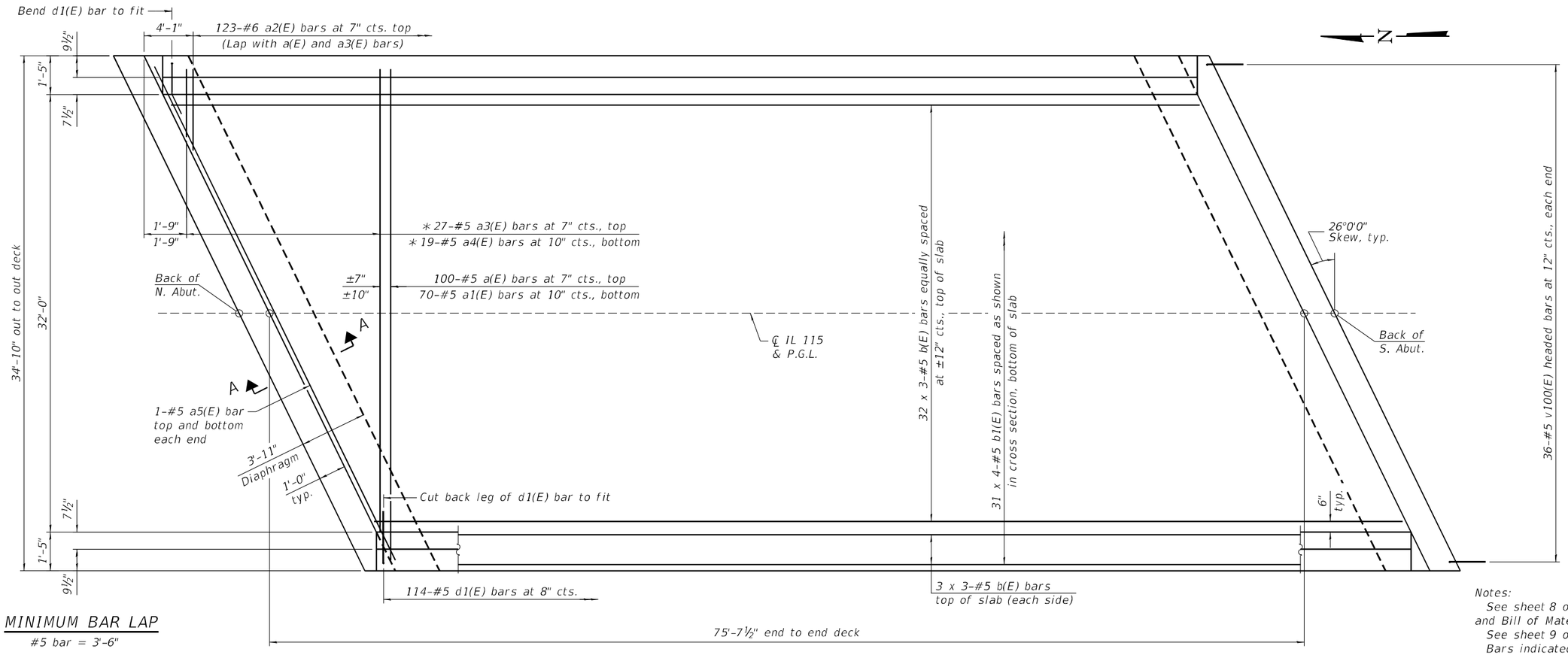

MINIMUM BAR LAP

#5 bar = 3'-6"

* See Field Cutting Diagram on sheet 8 of 20.

PLAN

Notes:

See sheet 8 of 20 for superstructure details and Bill of Material.

See sheet 9 of 20 for section A-A.

Bars indicated thus 20 x 3-#5 etc. indicates 20 lines of bars with 3 lengths per line.

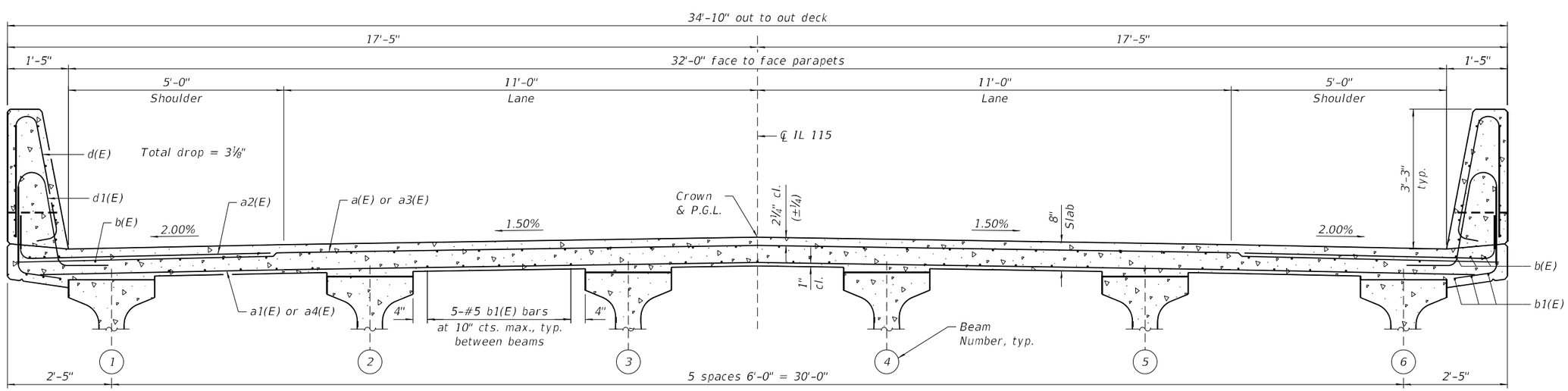

CROSS SECTION

(Looking South)

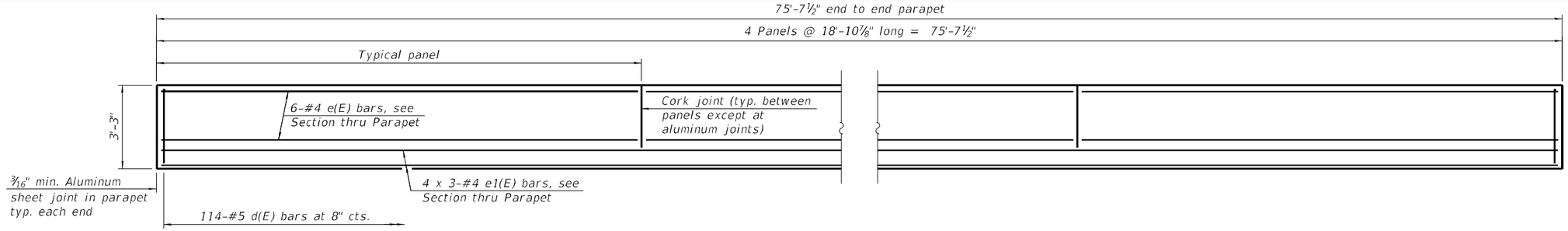

INSIDE ELEVATION OF PARAPET

MINIMUM BAR LAP

#4 bar = 2'-5"

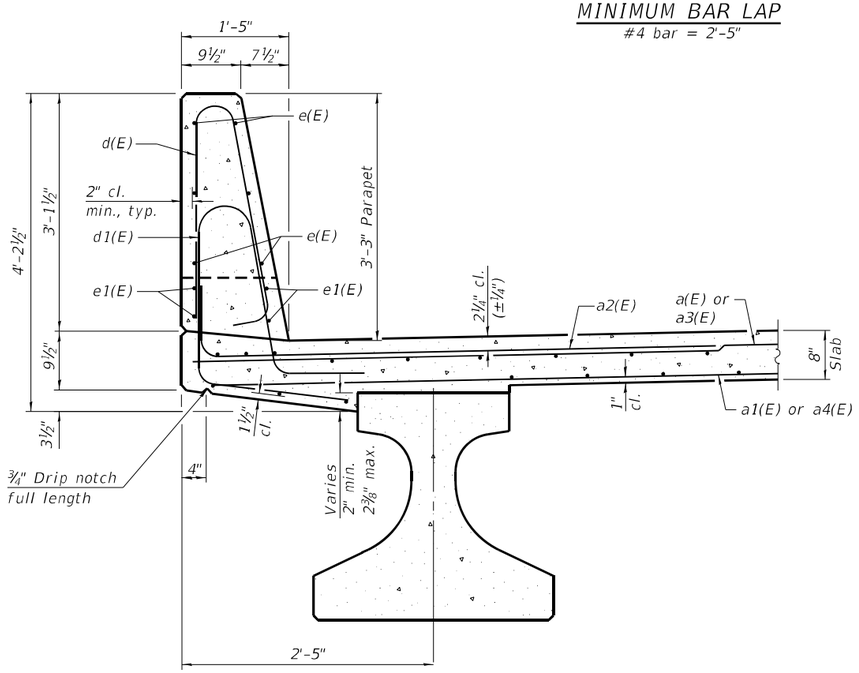

SECTION THRU PARAPET

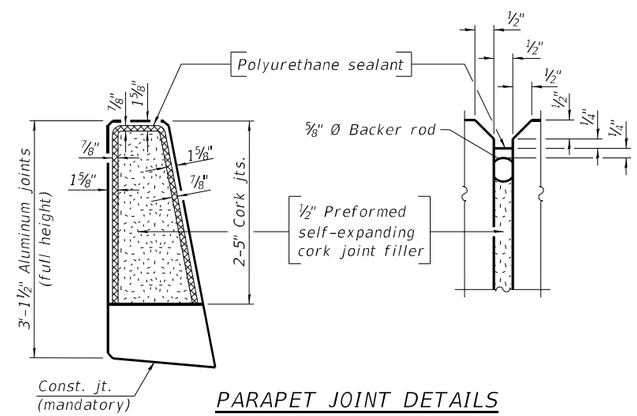

PARAPET JOINT DETAILS

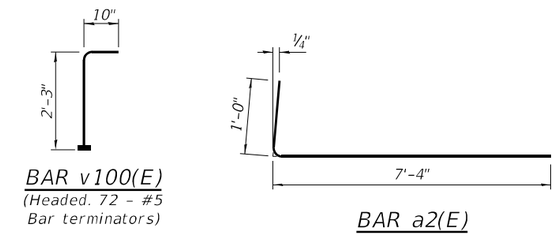

BAR v100(E)

(Headed. 72 - #5 Bar terminators)

BAR a2(E)

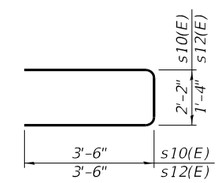

BARS s10(E) & s12(E)

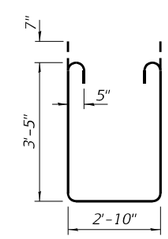

BAR s11(E)

Notes:

The 3/16" min. aluminum sheet shall be ASTM B 209 alloy 3003-H14 and coated with 5 mils of either bitumen paint or epoxy paint to minimize reaction with wet concrete. Cost included with Concrete Superstructure.

The polyurethane sealant shall be according to Article 1050.04 of the Std. Spec. and the color shall be gray.

Bar terminators, paid for separately. See Total Bill of Material.

See sheet 18 of 20 for Concrete Parapet Slip Forming Option details.

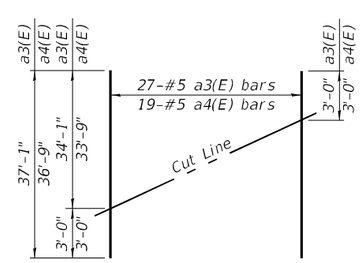

FIELD CUTTING DIAGRAM

Order a3(E) and a4(E) bars full length. Cut as shown and use remainder of bars in opposite end of deck.

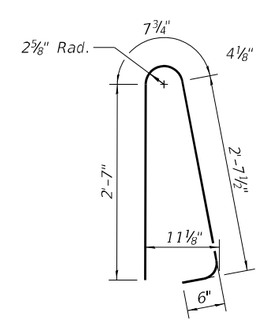

BAR d(E)

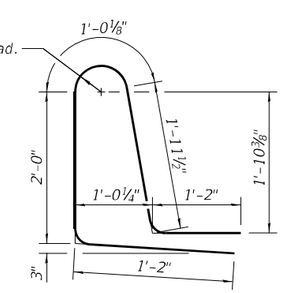

BAR d1(E)

SUPERSTRUCTURE BILL OF MATERIAL

Bar	No.	Size	Length	Shape
a(E)	100	#5	34'-6"	
a1(E)	70	#5	33'-10"	
a2(E)	246	#6	8'-4"	
a3(E)	27	#5	37'-1"	
a4(E)	19	#5	36'-9"	
a5(E)	4	#5	38'-5"	
b(E)	114	#5	27'-7"	
b1(E)	124	#5	21'-7"	
d(E)	228	#5	6'-5"	
d1(E)	228	#5	7'-4"	
e(E)	48	#4	18'-6"	
e1(E)	24	#4	26'-9"	
m10(E)	8	#6	38'-5"	
m11(E)	20	#6	5'-4"	
m12(E)	8	#6	1'-9"	
m13(E)	10	#6	2'-9"	
m14(E)	4	#6	0'-7"	
m15(E)	24	#5	4'-0"	
s10(E)	48	#5	9'-2"	
s11(E)	48	#5	10'-10"	
s12(E)	48	#5	8'-4"	
v100(E)	72	#5	3'-1"	
Reinforcement Bars, Epoxy Coated			Lbs.	23,890
Concrete Superstructure			Cu. Yds.	121.6

Bars indicated thus 1 x 2-#4 etc. indicates 1 line of bars with 2 lengths per line.

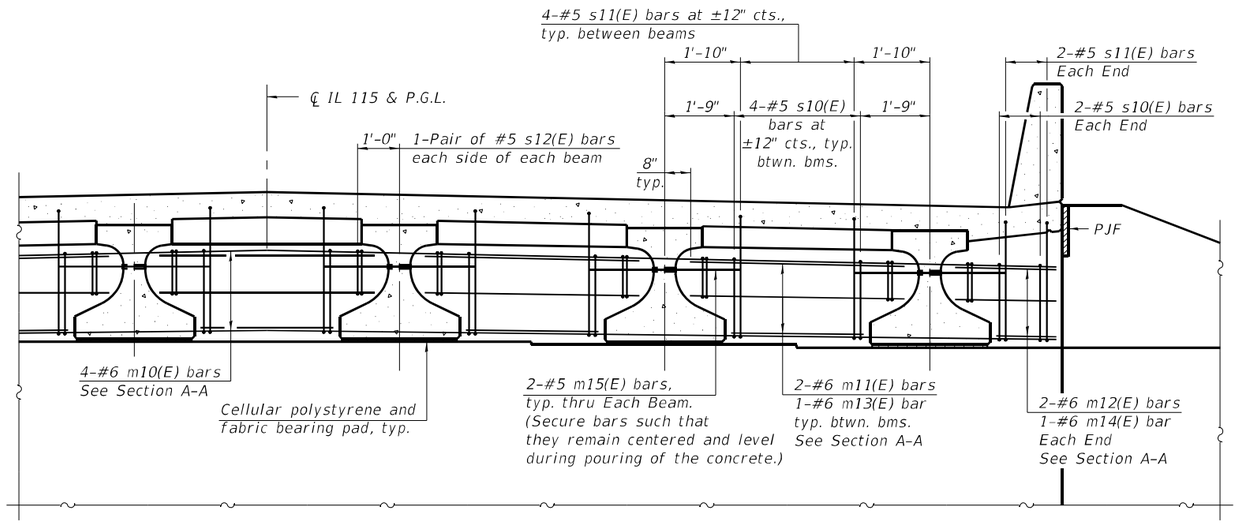

DIAPHRAGM AT ABUTMENT

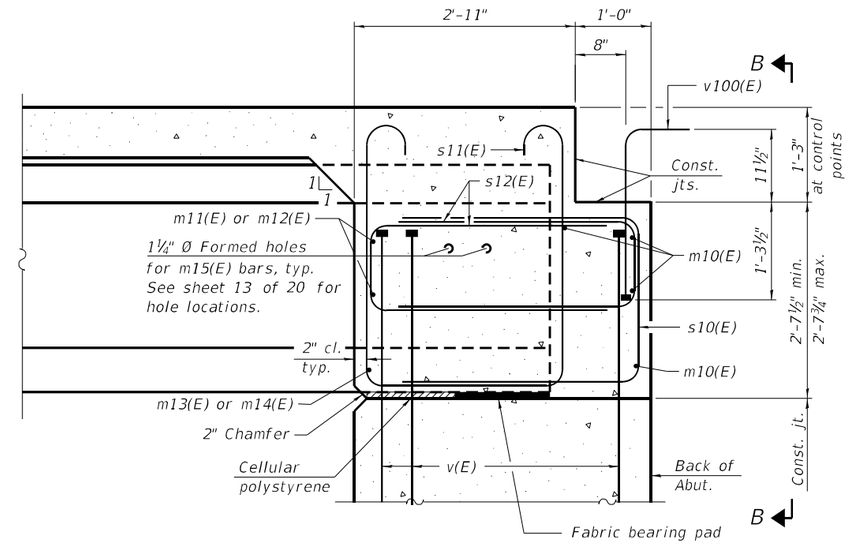

SECTION A-A
(at Rt. ∠'s)

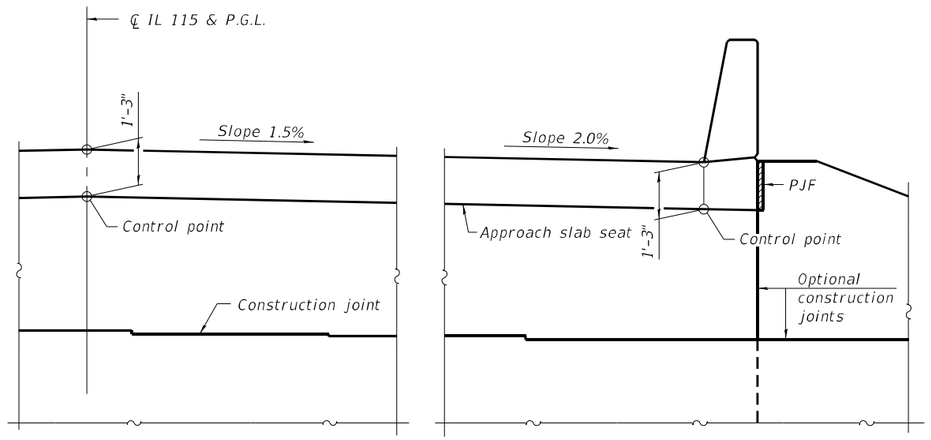

VIEW B-B

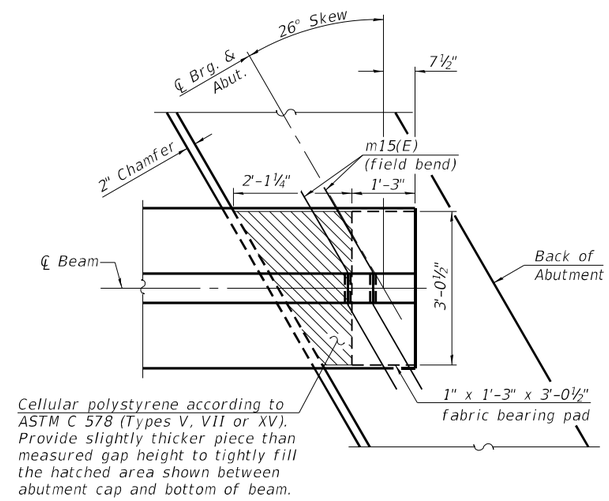

PLAN AT ABUTMENT
(Showing bottom flange of beam)

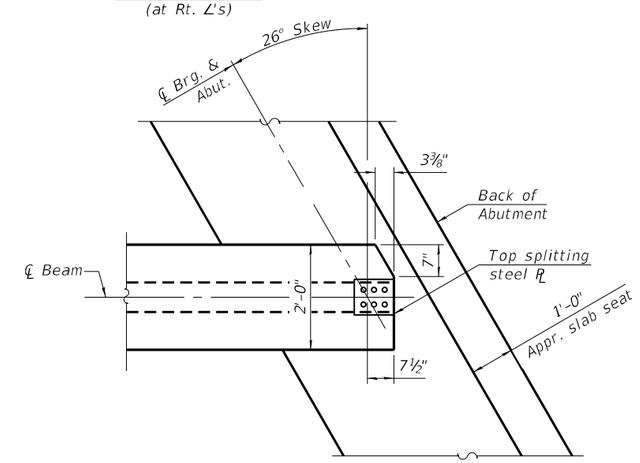

TOP FLANGE PLAN - CLIPPED
(Showing top flange of beam)

Notes:
See sheet 8 of 20 for superstructure details and Bill of Material.
See sheet 10 of 20 for PJF details.
The s10(E), s11(E) and s12(E) bars shall be placed parallel to the beams. Spacing for these bars shall be at right angles to the beams.
The approach slab seat shall have a constant slope determined from the control points shown.
Cost of cellular polystyrene is included with Concrete Superstructure.

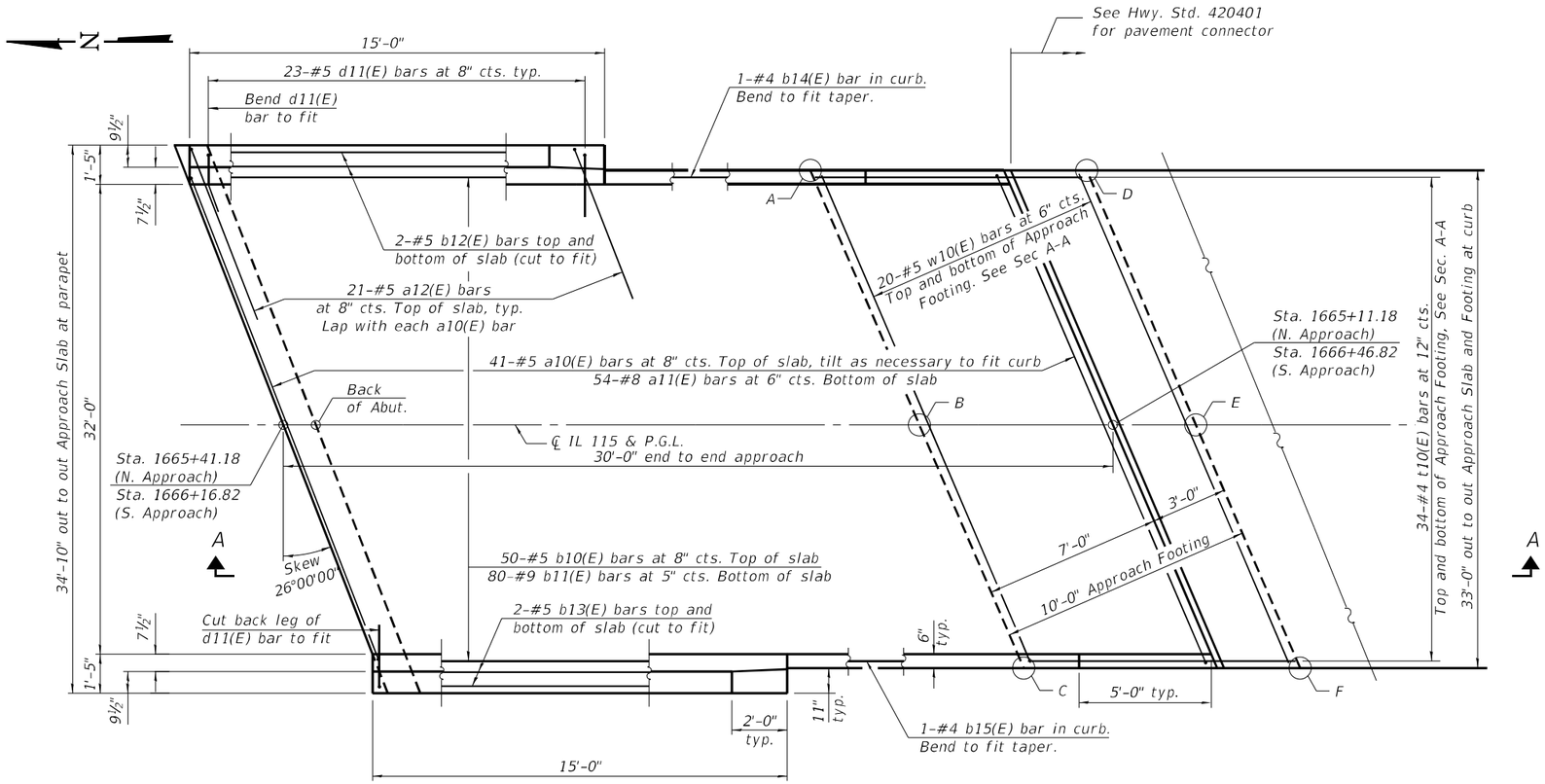

PLAN

(S. approach slab shown; N. approach slab similar by 180° rotation)

TOP AND BOTTOM ELEVATIONS FOR APPROACH FOOTING

N. Approach			S. Approach		
Point/ Location	Top	Bottom	Point/ Location	Top	Bottom
A - SW SL	658.81	657.98	A - NE SL	658.82	657.99
B - S ℄	659.04	658.21	B - N ℄	659.05	658.22
C - SE SL	658.73	657.90	C - NW SL	658.74	657.91
D - NW SL	658.76	657.93	D - SE SL	658.77	657.94
E - N ℄	658.98	658.15	E - S ℄	658.99	658.16
F - NE SL	658.66	657.83	F - SW SL	658.67	657.84

NEAR ABUTMENT

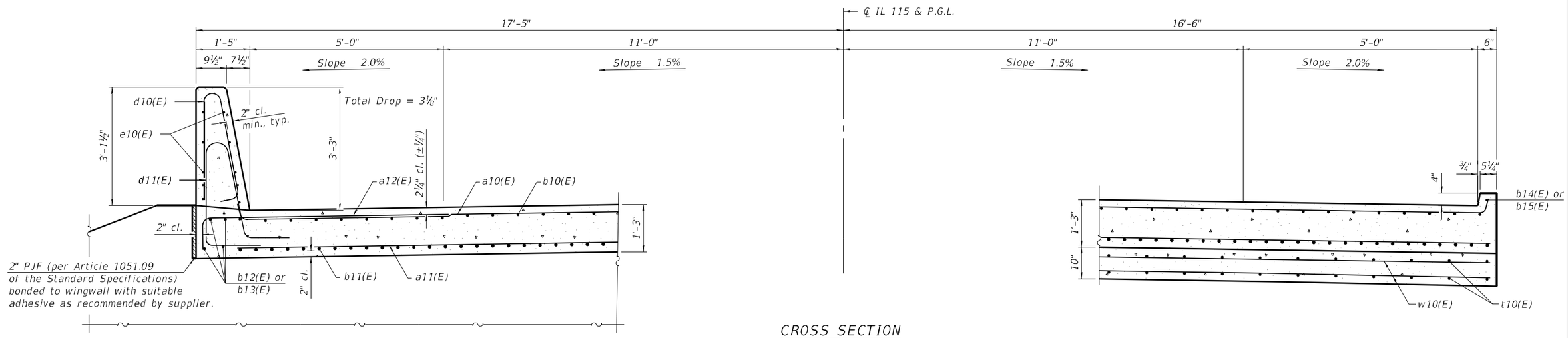

CROSS SECTION

(Looking South)

AT APPROACH FOOTING

MODEL: Default
FILE NAME: pw:\\pwidot\uscen01:HDR_US_Central_01\Documents\IDOT\OSEH_IDOT_IL115_Br_Replac_WO_6\6.0_CAD_BIM\6.2_VIP\6.2.3_CADD Sheet\Structures_OSEH\0161669-62723-XX-A-SLAB-PLAN.dgn

OSEH inc. 910 W. VAN BUREN ST SUITE 603 CHICAGO, IL 60607 WWW.OSEHINC.COM

USER NAME =	DESIGNED – FL	REVISED –	
	CHECKED – WL	REVISED –	
PLOT SCALE =	DRAWN – FL	REVISED –	
PLOT DATE = 2/13/2025	CHECKED – WL	REVISED –	

STATE OF ILLINOIS
DEPARTMENT OF TRANSPORTATION

BRIDGE APPROACH SLAB PLAN
STRUCTURE NO. 027-0105

SHEET 10 OF 20 SHEETS

F.A.P. RTE.	SECTION	COUNTY	TOTAL SHEETS	SHEET NO.
796	(106BR-2)BR	FORD	55	36
		CONTRACT NO. 66B58		
		ILLINOIS	FED. AID PROJECT	

2/13/2025 10:48:37 AM

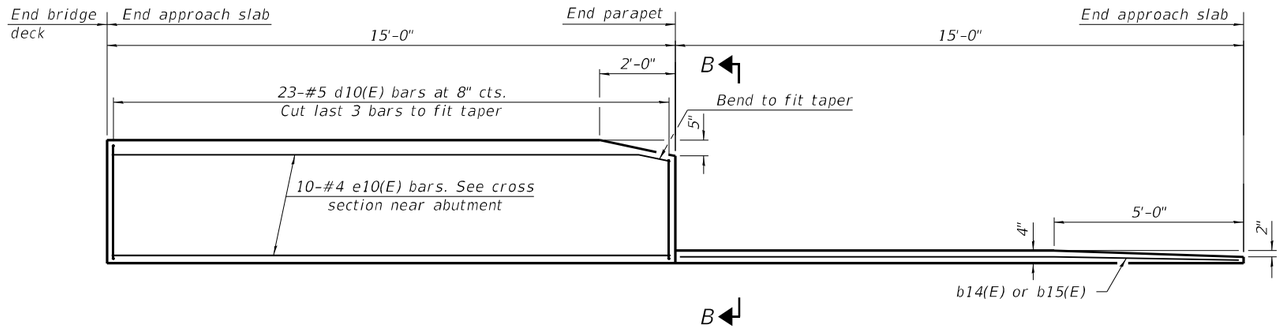

INSIDE ELEVATION OF PARAPET AND CURB

Notes:

The joint opening shall be adjusted for temperature per Article 520.04 of the Standard Specifications. However, since this detail is for jointless structures, the length of bridge used to calculate the adjustment shall be equal to half the total bridge length plus the length of the bridge approach slab.

Parapet concrete shall be paid for as Concrete Superstructure.

Approach slab shall be paid for as Concrete Superstructure (Approach Slab).

Approach footing concrete shall be paid for as Concrete Structures.

The approach footing maximum applied service bearing pressure (Qmax) = 2.0 ksf.

Cost of excavation for approach footing included with Concrete Structures.

For Granular Backfill for Structures and drainage treatment details, see sheet 2 of 20.

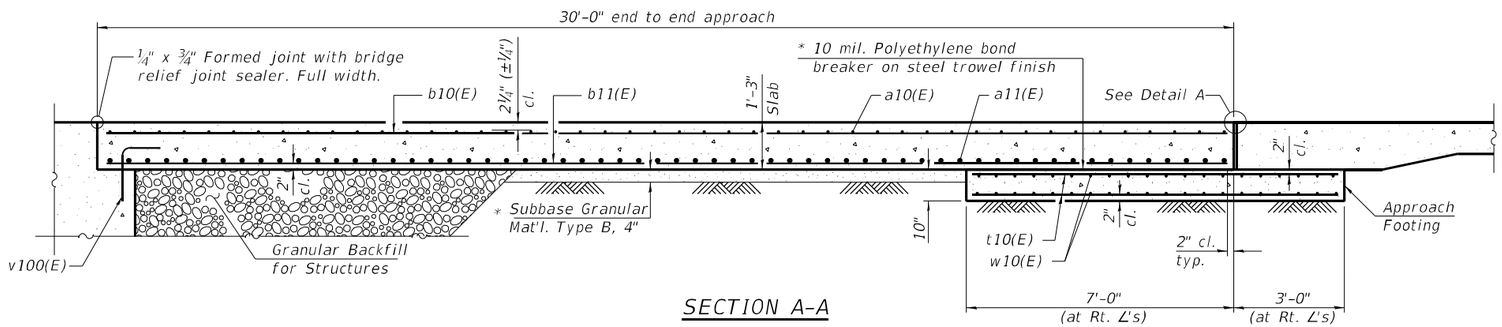

SECTION A-A

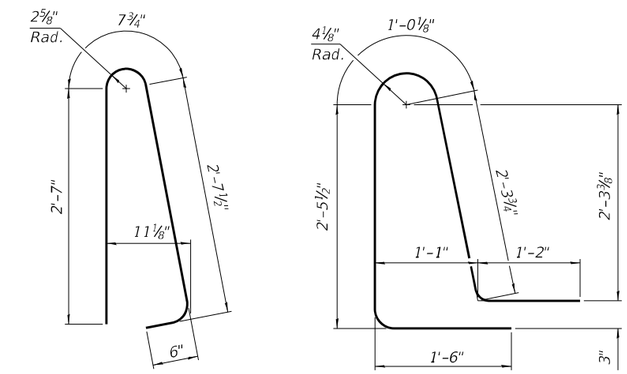

BAR d10(E)

BAR d11(E)

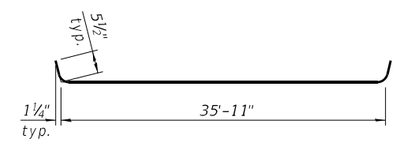

BAR a10(E)

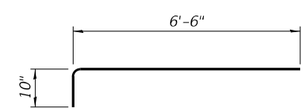

BAR a12(E)

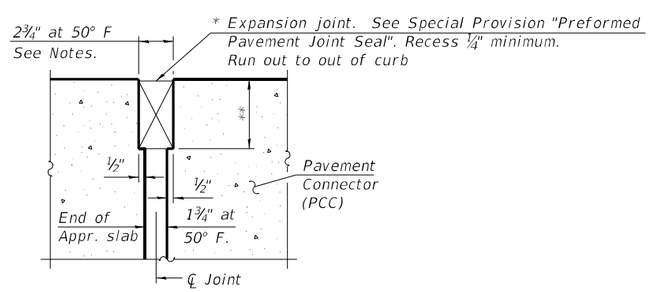

DETAIL A

(at Rt. ∠'s)

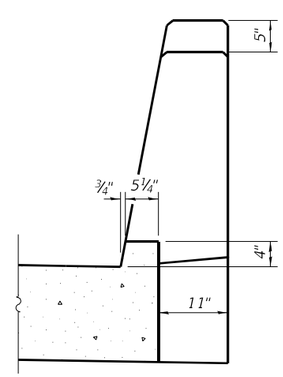

VIEW B-B

* Cost included with Concrete Superstructure (Approach Slab).

** Per manufacturer recommendations

TWO APPROACHES

BILL OF MATERIAL

Bar	No.	Size	Length	Shape
a10(E)	82	#5	36'-10"	
a11(E)	108	#8	36'-4"	
a12(E)	84	#5	7'-4"	
b10(E)	100	#5	29'-8"	
b11(E)	160	#9	29'-8"	
b12(E)	8	#5	15'-3"	
b13(E)	8	#5	14'-4"	
b14(E)	2	#4	14'-6"	
b15(E)	2	#4	14'-9"	
d10(E)	92	#5	6'-5"	
d11(E)	92	#5	8'-6"	
e10(E)	40	#4	14'-8"	
t10(E)	136	#4	10'-9"	
w10(E)	80	#5	36'-4"	
Concrete Superstructure			Cu. Yd.	3.9
Concrete Superstructure (Approach Slab)			Cu. Yd.	97.2
Concrete Structures			Cu. Yd.	22.7
Reinforcement Bars, Epoxy Coated			Pound	39,630

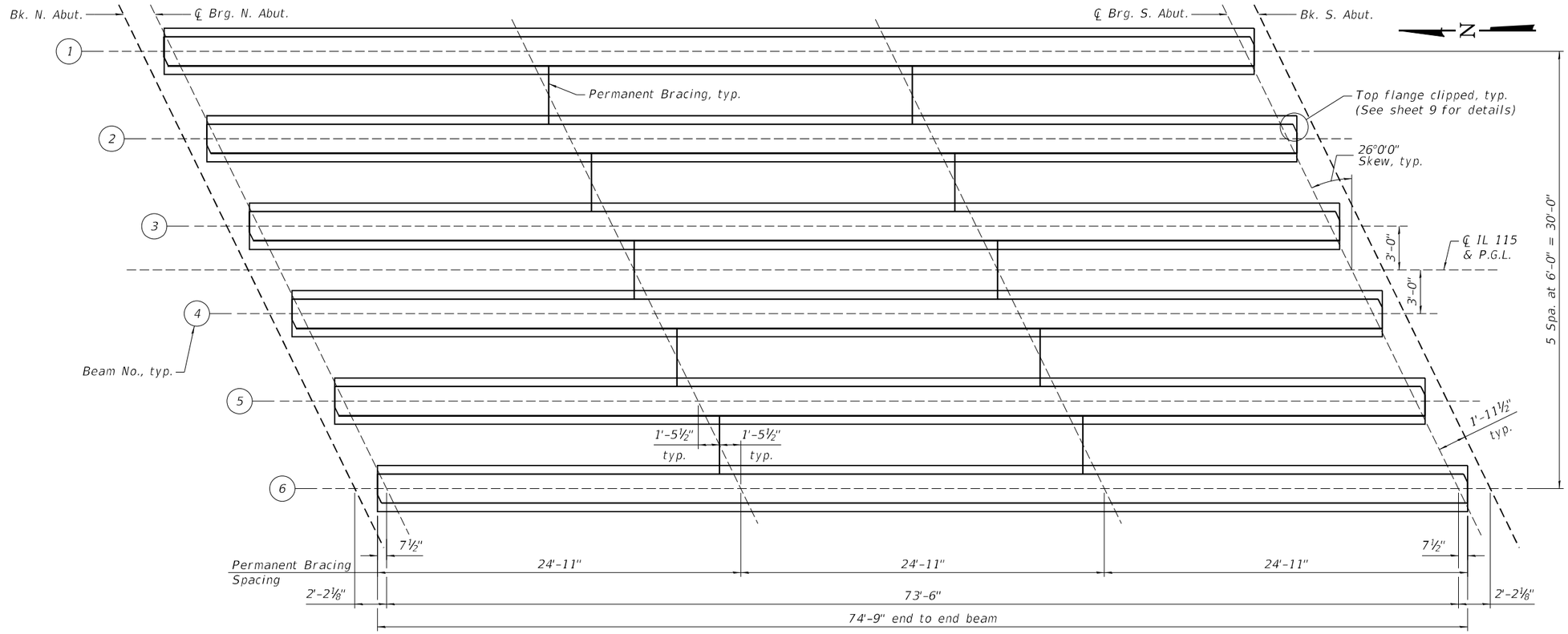

FRAMING PLAN

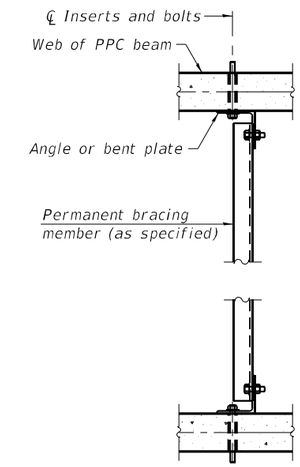

PLAN

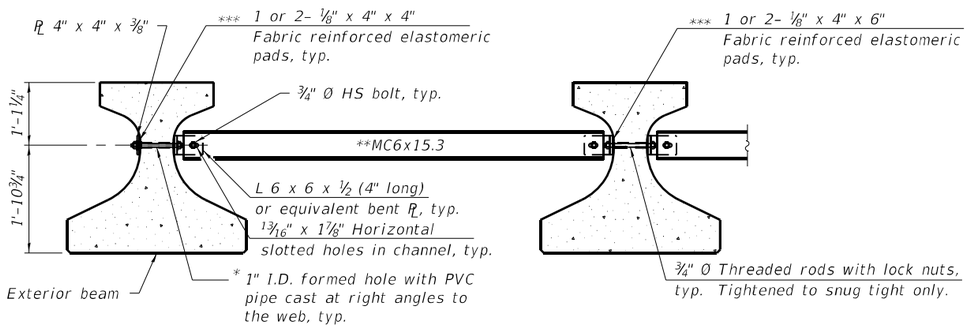

Notes:

All material for bracing shall be hot dip galvanized according to ASHTO M111 unless otherwise noted.

Two hardened washers are required for each set of oversized holes.

All holes shall be 15/16" Ø unless otherwise noted.

5/16" x 3" x 3" plate washers are required over all slotted holes.

All bolts, threaded rods, and hardware shall be galvanized according to AASHTO M232.

Threaded rods shall be ASTM F 1554 Grade 55.

Bracing shall be installed as beams are erected and tightened as soon as possible during erection.

Permanent bracing shall not be paid for separately, but shall be included in the cost of Furnishing and Erecting Precast Prestressed Concrete Beams.

* Fabricator shall locate to miss strands within permissible tolerances.

** Alternate MC6x18 channels are permitted to facilitate material acquisition.

*** Place pads as necessary to provide a flat mounting surface between the steel and concrete.

PERMANENT BRACING DETAILS FOR IL36 BEAMS

(10 Required)

INTERIOR BEAM MOMENT TABLE		
		0.5 Sp. 1
I	(in^4)	100,433
I'	(in^4)	314,986
S_b	(in^3)	6,832
S_b'	(in^3)	12,362
S_t	(in^3)	4,715
S_t'	(in^3)	29,942
DC1	(k/')	1.408
M_{DC1}	('k)	953
DC2	(k/')	0.177
M_{DC2}	('k)	119
DW	(k/')	0.267
M_{DW}	('k)	180
LLDF		0.563
M_{LL+IM}	('k)	1024

INTERIOR BEAM REACTION TABLE		
		Abutments
LLDF		0.734
OCF		1.098
R_{DC1}	(k)	51.9
R_{DC2}	(k)	6.7
R_{DW}	(k)	10.1
R_{LL+IM}	(k)	78.7
R_{Total} (Strength I)(Impact)	(k)	226.1
R_{Total} (Strength I)(No Impact)	(k)	199.4

I: Non-composite moment of inertia of beam section ($in.^4$).

I': Composite moment of inertia of beam section ($in.^4$).

S_b: Non-composite section modulus for the bottom fiber of the prestressed beam ($in.^3$).

S_b': Composite section modulus for the bottom fiber of the prestressed beam ($in.^3$).

S_t: Non-composite section modulus for the top fiber of the prestressed beam ($in.^3$).

S_t': Composite section modulus for the top fiber of the prestressed beam ($in.^3$).

DC1: Un-factored non-composite dead load (kips/ft.).

M_{DC1}: Un-factored moment due to non-composite dead load (kip-ft.).

DC2: Un-factored long-term composite (superimposed excluding future wearing surface) dead load (kips/ft.).

M_{DC2}: Un-factored moment due to long-term composite (superimposed excluding future wearing surface) dead load (kip-ft.).

DW: Un-factored long-term composite (superimposed future wearing surface only) dead load (kips/ft.).

M_{DW}: Un-factored moment due to long-term composite (superimposed future wearing surface only) dead load (kip-ft.).

LLDF: Live Load Distribution Factor for moment and shear computed according to Article 4.6.2.2 and further IDOT provisions.

M_{LL+IM}: Un-factored live load moment plus dynamic load allowance (impact) (kip-ft.).

OCF: Obtuse Correction Factor computed according to Article 4.6.2.2.3c or as further simplified by IDOT provisions.

R_{DC1}: Un-factored reaction due to non-composite dead load (kip).

R_{DC2}: Un-factored reaction due to long-term composite (superimposed excluding future wearing surface) dead load (kip).

R_{DW}: Un-factored reaction due to long-term composite (superimposed future wearing surface only) dead load (kip).

R_{LL}: Un-factored live load reaction (kip).

R_{IM}: Un-factored dynamic load allowance (impact) (kip).

R_{Total} (Strength I)(Impact): Total factored reaction including dynamic load allowance (impact) (kip).

R_{Total} (Strength I)(No Impact): Total factored reaction not including dynamic load allowance (impact) (kip).

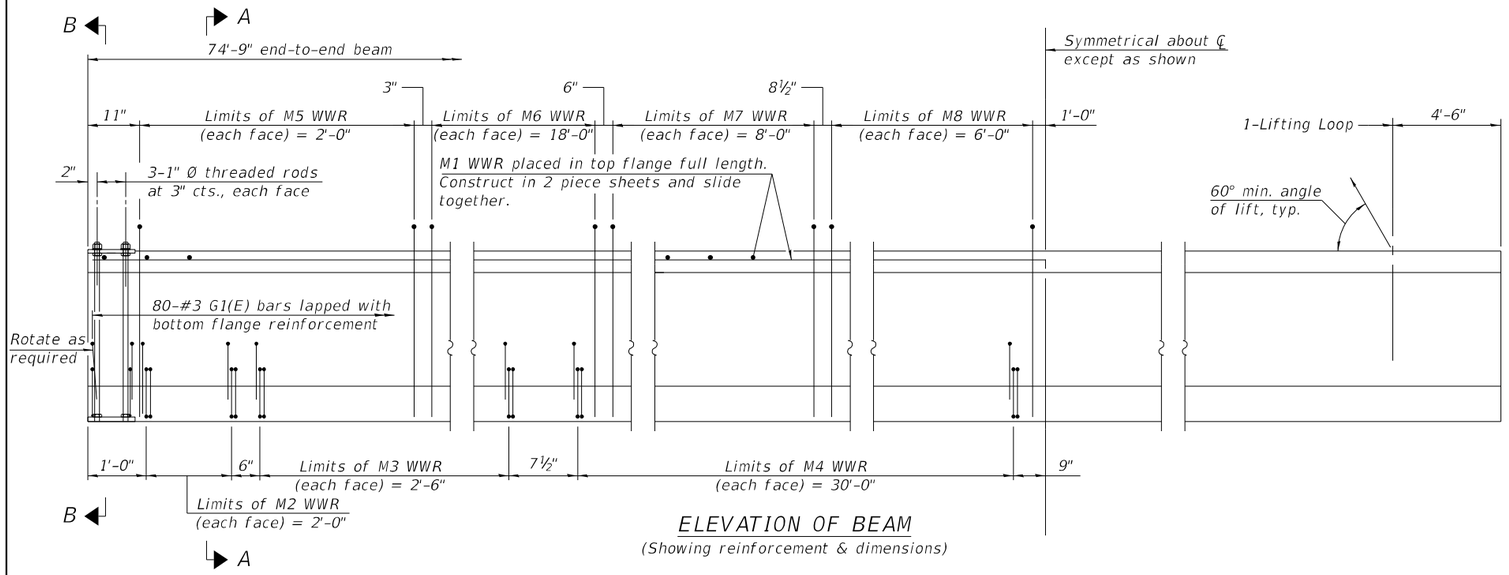

ELEVATION OF BEAM
(Showing reinforcement & dimensions)

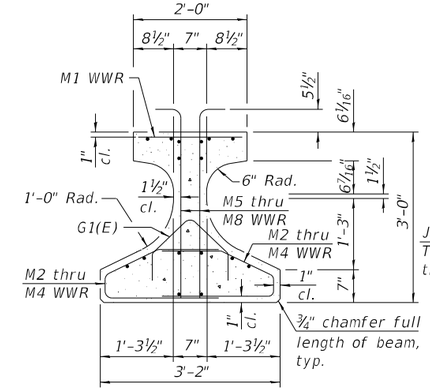

SECTION A-A

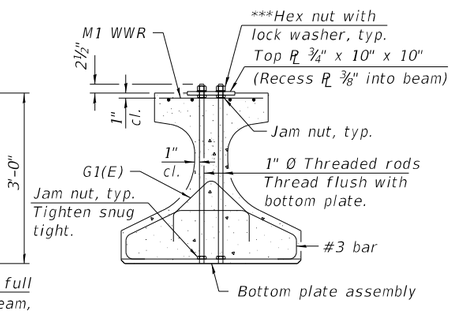

SECTION B-B
***Only tighten sufficiently
to compress lock washers

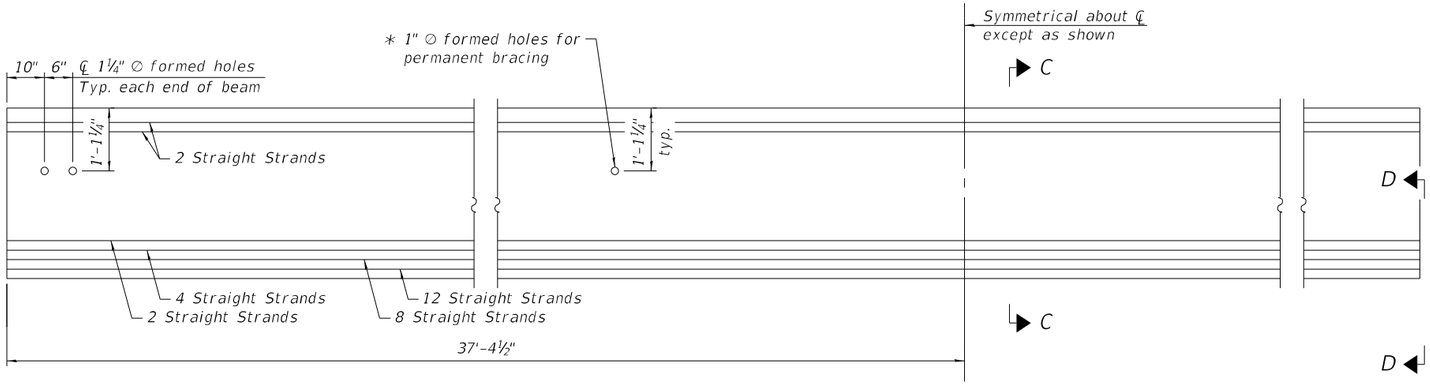

ELEVATION OF BEAM
(Showing prestressing steel)

* See sheet 12 of 20 for locations of permanent bracing
and placement of formed holes in beam web.

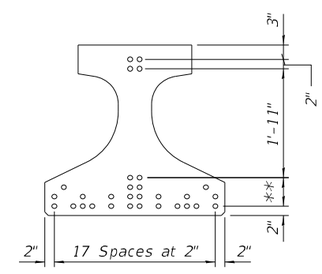

SECTION C-C
(30-0.6" Ø 270 ksi strands)

** 3 Spa. at 2" = 6"

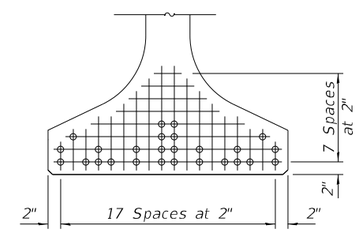

VIEW D-D

○ Fully bonded strand

Note:
See sheet 14 of 20 for additional details and Bill of Material.
See sheet 9 of 20 for top flange clipping details.

MODEL: Default
FILE NAME: pw:\\pwhdrascen01-HDR_US_Central_01\Documents\ILDOT\OSEH_IDOT_IL115_Br_Replac_WO_616.0_CAD_BIM\6.2_WIP\6.2.3_CADD Sheets\Structures_HDR\36" PPC I-Beam

2/13/2025 10:49:31 AM

HDR ENGINEERING, INC.
9450 W. BRYN MAWR AVE.
ROSEMONT, IL 60018

USER NAME =	DESIGNED – WL	REVISED –	
	CHECKED – MR	REVISED –	
PLOT SCALE =	DRAWN – AMN	REVISED –	
PLOT DATE = 2/13/2025	CHECKED – WL	REVISED –	

STATE OF ILLINOIS
DEPARTMENT OF TRANSPORTATION

IL36N BEAM
STRUCTURE NO. 027-0105

SHEET 13 OF 20 SHEETS

F.A.P. RTE.	SECTION	COUNTY	TOTAL SHEETS	SHEET NO.
796	(106BR-2)BR	FORD	55	39
		CONTRACT NO. 66B58		
	ILLINOIS	FED. AID PROJECT		

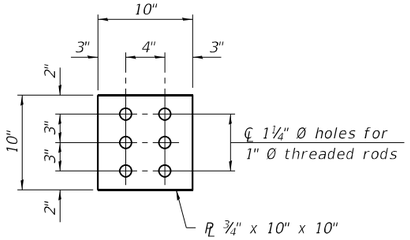

PLAN - TOP PLATE

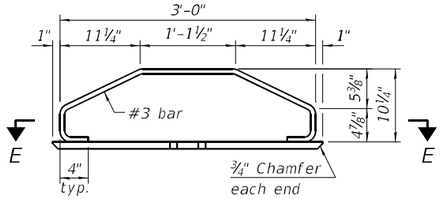

ELEVATION - BOTTOM PLATE ASSEMBLY

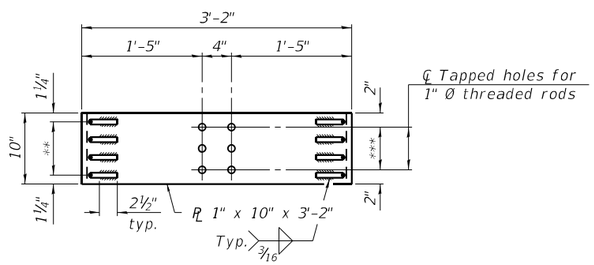

SECTION E-E

** 3 Spaces at 2½" = 7½"

*** 2 Spaces at 3" = 6"

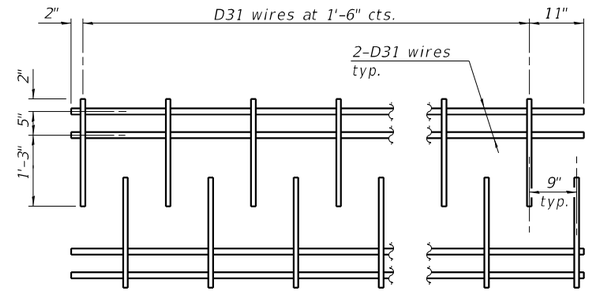

M1 WWR DETAIL

When multiple sheets of M1 WWR are required along the beam length, #5(E) bars (5'-0" long) shall be used to splice the longitudinal D31 wires together (Min. Lap 2'-4").

NOTES

Inserts for ¾" Ø threaded dowel rods, when specified, are to be two strut, ferrule type for interior beams and single ferrule, flared loop type for exterior beams.

Prestressing steel shall be uncoated high strength, low relaxation 7-wire strand, Grade 270. The nominal diameter for beam strands shall be 0.6" and the nominal cross-sectional area shall be 0.217 sq. in. The minimum nominal diameter for lifting loops shall be ½" and the minimum nominal cross sectional area shall be 0.153 sq. in.

The beams shall have a final concrete compressive strength, f'c, of 8500 psi and a release concrete compressive strength, f'ci, of 6500 psi.

A minimum 2½" Ø lifting pin shall be used to engage the lifting loops during handling.

The top and bottom plates shall be AASHTO M270 Grade 50.

The top plates and bottom plate assemblies shall be galvanized according to AASHTO M111. The threaded rods, nuts and washers shall be galvanized according to AASHTO M232.

Threaded rods shall be ASTM F 1554 Grade 55.

Welded Wire Reinforcement (WWR) shall conform to ASTM A884 with a Class A, Type 1 epoxy coating or ASTM A1060, Table 3 galvanized coating.

TABLE OF DIMENSIONS

(The WWR designs assume grade 60. If necessary, this permits the fabricator to directly substitute grade 60 rebar as detailed in the Manual for Fabrication of Precast Prestressed Concrete Products.)

SPAN 1

WWR	A	B
M2	9	3"
M3	6	6"
M4	21	1'-6"
M5	9	3"
M6	37	6"
M7	9	1'-0"
M8	4	2'-0"

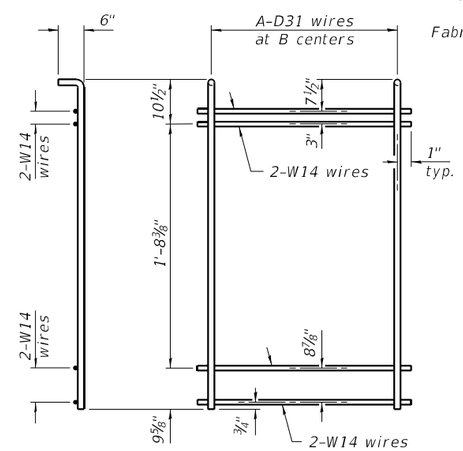

M5 THRU M8 WWR DETAIL

(See Table of Dimensions)

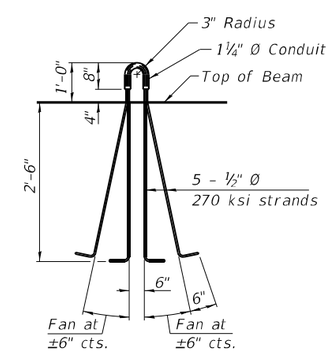

LIFTING LOOP DETAIL

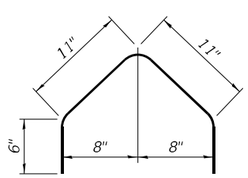

BAR G1(E)

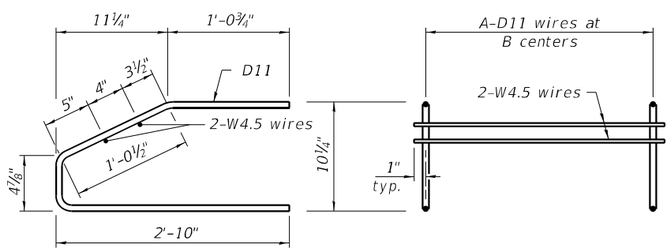

M2 THRU M4 WWR DETAIL

(See Table of Dimensions)

BILL OF MATERIAL

Item	Unit	Total
Furnishing and Erecting Precast Prestressed Concrete Beams, IL36N	Ft.	448.5

IL36-2438D 07-11-2024

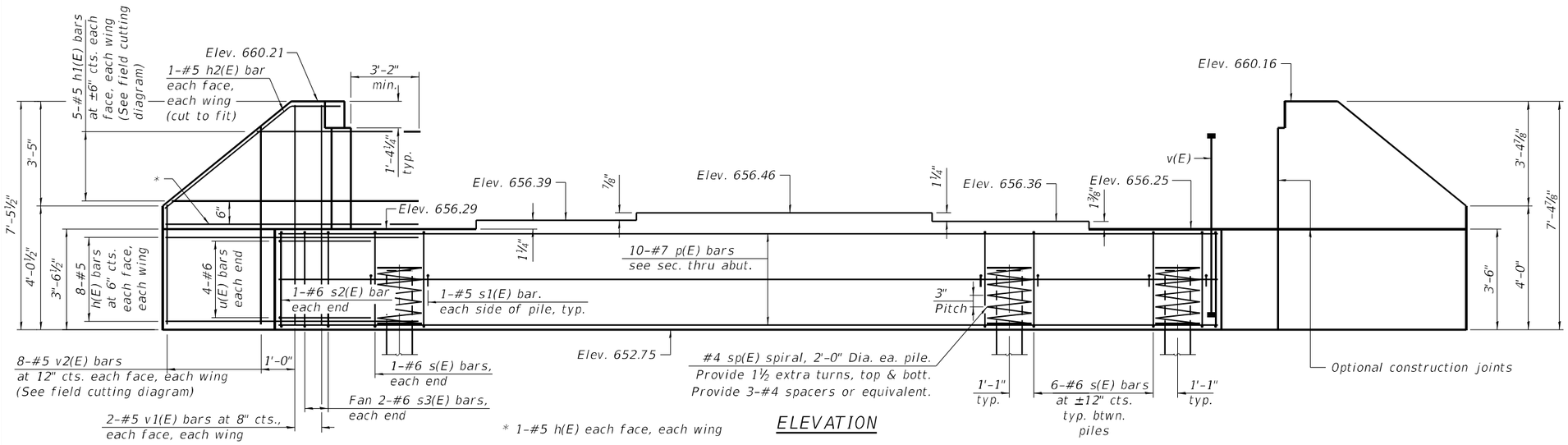

ELEVATION

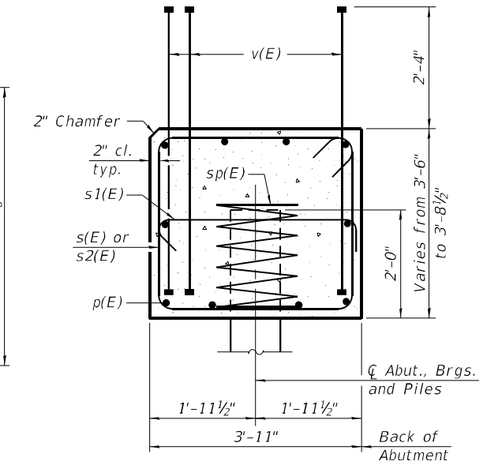

SEC. THRU ABUT.

Dimensions at right angles to abutment.

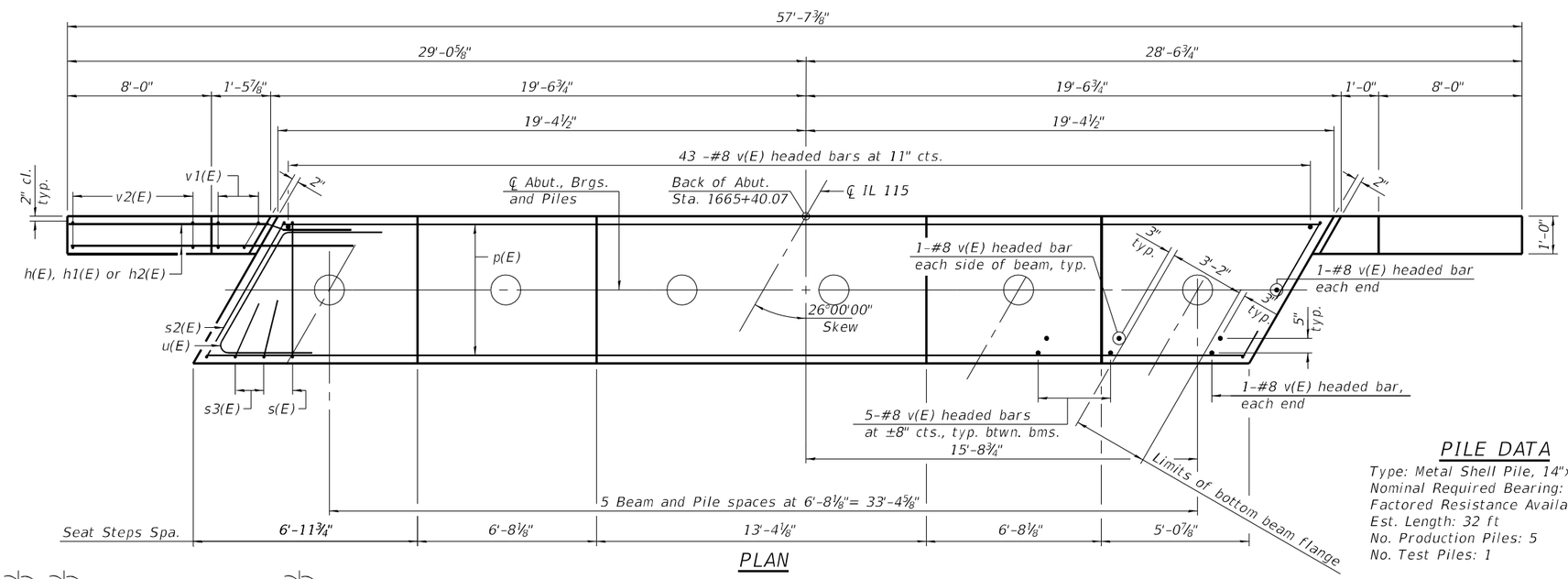

PLAN

BILL OF MATERIAL

	Bar	No.	Size	Length	Shape
	h(E)	36	#5	12'-6"	
	h1(E)	10	#5	19'-5"	
	h2(E)	4	#5	9'-9"	
	p(E)	10	#7	38'-5"	
	s(E)	32	#6	14'-10"	
	s1(E)	12	#5	4'-7"	
	s2(E)	2	#6	15'-6"	
	s3(E)	4	#6	10'-0"	
**	sp(E)	6	#4	2'-0"	
	u(E)	8	#6	12'-6"	
	v(E)	84	#8	5'-6"	
	v1(E)	8	#5	7'-2"	
	v2(E)	16	#5	10'-5"	
	Structure Excavation	Cu. Yd.		79	
	Concrete Structures	Cu. Yd.		24.6	
	Reinforcement Bars, Epoxy Coated	Pound		4,270	
	Furnishing Metal Shell Piles 14"x0.312"	Foot		160	
	Driving Piles	Foot		160	
	Test Pile Metal Shells	Each		1	
	Pile Shoes	Each		6	

** Length is height of spiral.

PILE DATA

Type: Metal Shell Pile, 14"x0.312" with pile shoes
Nominal Required Bearing: 570 kips
Factored Resistance Available: 313 kips
Est. Length: 32 ft
No. Production Piles: 5
No. Test Piles: 1

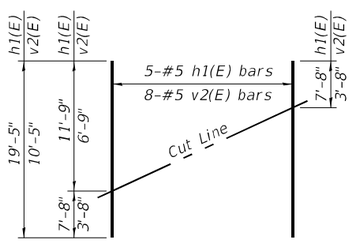

FIELD CUTTING DIAGRAM

Order h1(E) and v2(E) full length. Cut as shown and use remainder of bars in opposite wing.

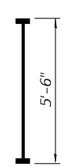

BAR v(E)

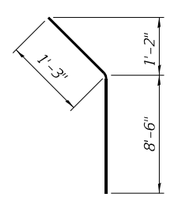

BAR h2(E)

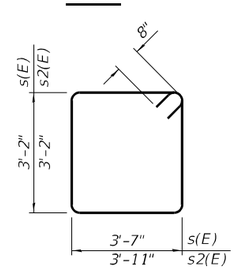

BAR s(E) & s2(E)

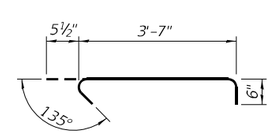

BAR s1(E)

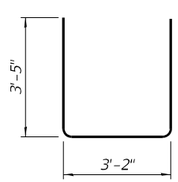

BAR s3(E)

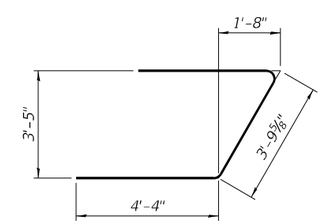

BAR u(E)

(Headed. 168-#8 Bar terminators)

Notes:
Pour steps monolithically with cap.
For details of piles see sheet 17 of 20.
Bar terminators, paid for separately.
See Total Bill of Material.

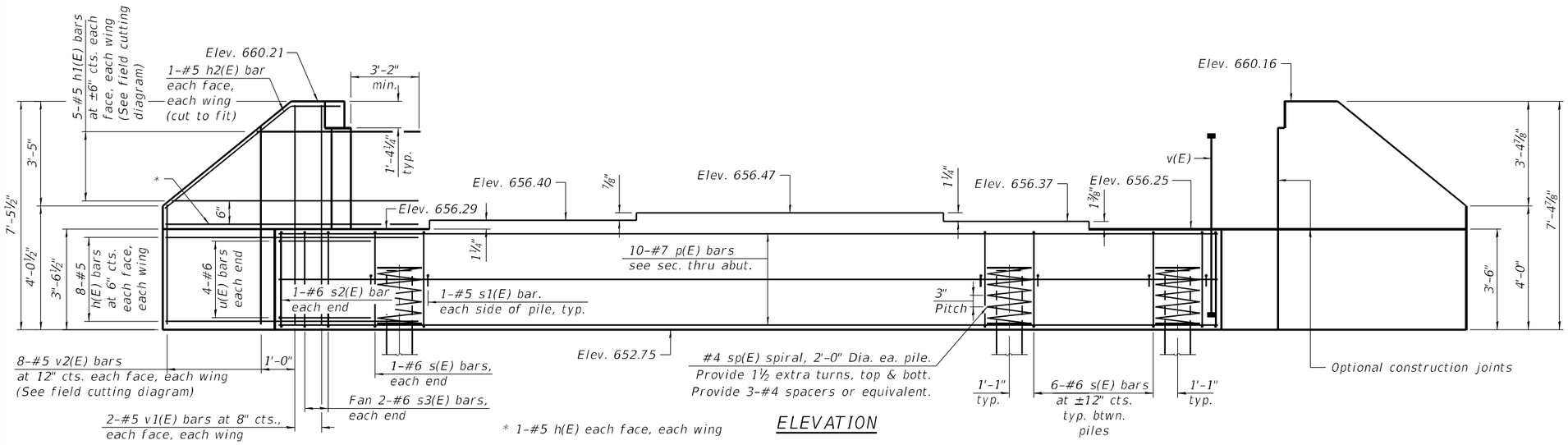

ELEVATION

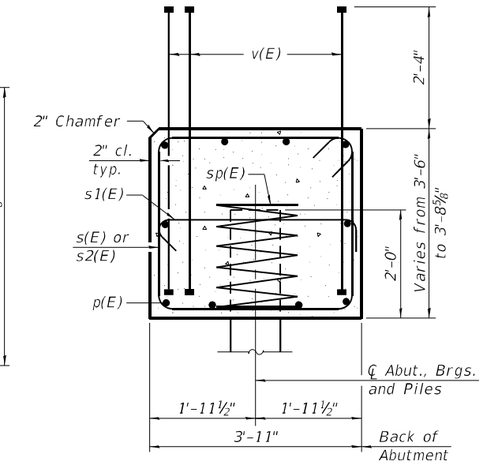

SEC. THRU ABUT.

Dimensions at right angles to abutment.

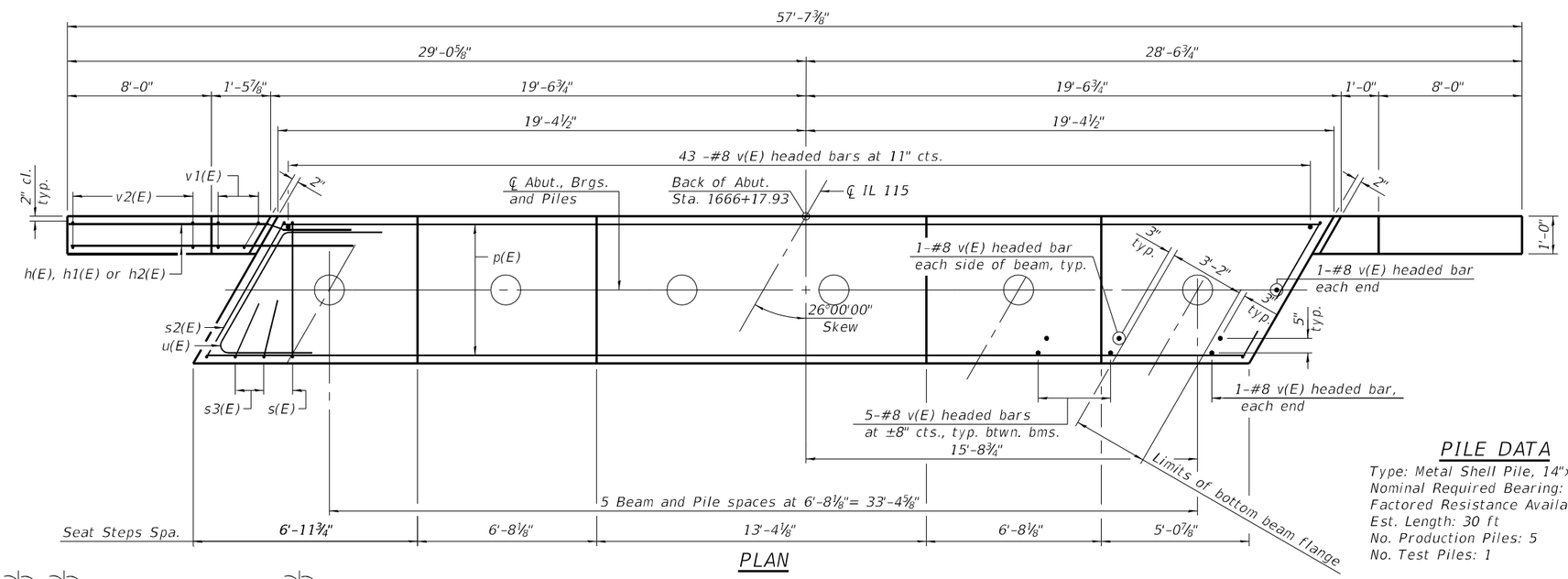

PLAN

BILL OF MATERIAL

	Bar	No.	Size	Length	Shape
	h(E)	36	#5	12'-6"	
	h1(E)	10	#5	19'-5"	
	h2(E)	4	#5	9'-9"	
	p(E)	10	#7	38'-5"	
	s(E)	32	#6	14'-10"	
	s1(E)	12	#5	4'-7"	
	s2(E)	2	#6	15'-6"	
	s3(E)	4	#6	10'-0"	
**	sp(E)	6	#4	2'-0"	
	u(E)	8	#6	12'-6"	
	v(E)	84	#8	5'-6"	
	v1(E)	8	#5	7'-2"	
	v2(E)	16	#5	10'-5"	
	Structure Excavation	Cu. Yd.	79		
	Concrete Structures	Cu. Yd.	24.6		
	Reinforcement Bars, Epoxy Coated	Pound	4,270		
	Furnishing Metal Shell Piles 14"x0.312"	Foot	150		
	Driving Piles	Foot	150		
	Test Pile Metal Shells	Each	1		
	Pile Shoes	Each	6		

** Length is height of spiral.

PILE DATA

Type: Metal Shell Pile, 14"x0.312" with pile shoes
Nominal Required Bearing: 463 kips
Factored Resistance Available: 255 kips
Est. Length: 30 ft
No. Production Piles: 5
No. Test Piles: 1

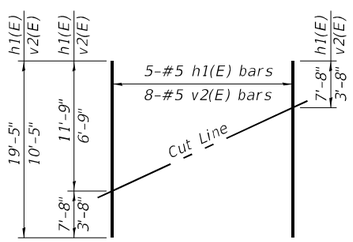

FIELD CUTTING DIAGRAM

Order h1(E) and v2(E) full length. Cut as shown and use remainder of bars in opposite wing.

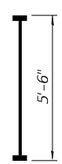

BAR v(E)

(Headed. 168-#8 Bar terminators)

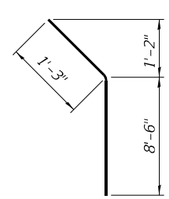

BAR h2(E)

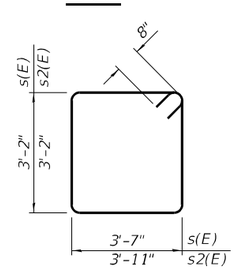

BAR s(E) & s2(E)

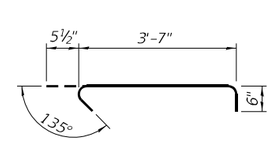

BAR s1(E)

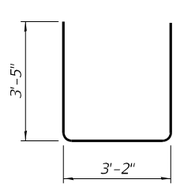

BAR s3(E)

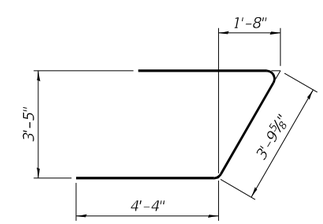

BAR u(E)

Notes:
Pour steps monolithically with cap.
For details of piles see sheet 17 of 20.
Bar terminators, paid for separately.
See Total Bill of Material.

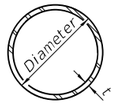

METAL SHELL PILE TABLE

Designation and outside diameter	Wall thickness t	Weight per foot (Lbs./ft.)	Inside volume (yd.³/ft.)
PP12	0.250"	31.37	0.0267
PP14	0.250"	36.71	0.0368
PP14	0.312"	45.61	0.0361
PP16	0.312"	52.32	0.0478
PP16	0.375"	62.64	0.0470

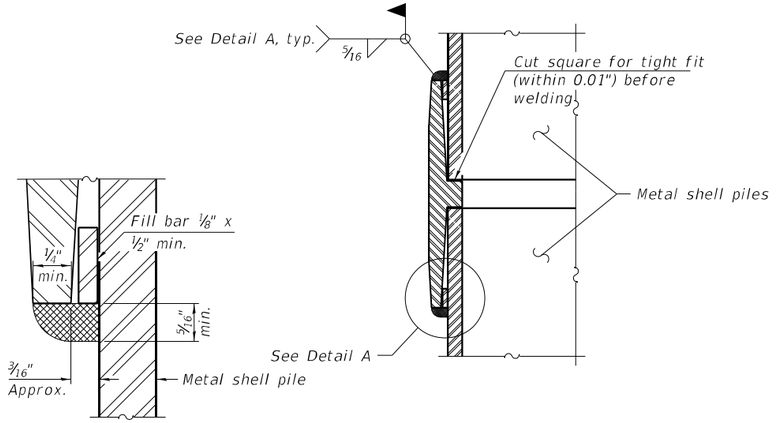

DETAIL A

WELDED COMMERCIAL SPLICE

Notes:
The 1/8" x 1/2" min. fill bar may be constructed of 2 bars with a 1/8" max. gap between them.
Pile segments shall be driven to solid contact with splicer before welding.

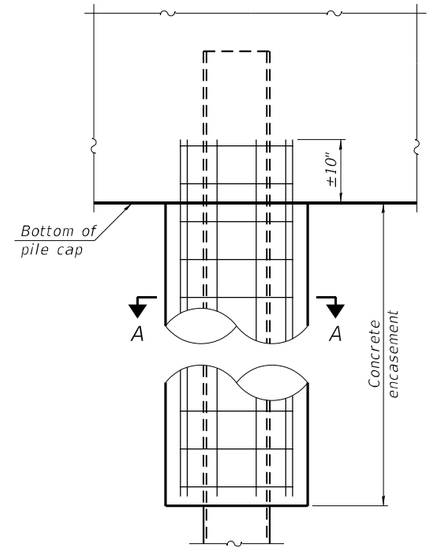

ELEVATION

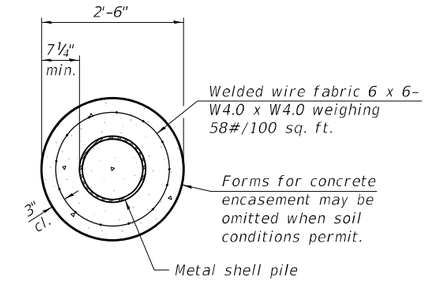

SECTION A-A

INDIVIDUAL PILE CONCRETE ENCASEMENT

(When specified)

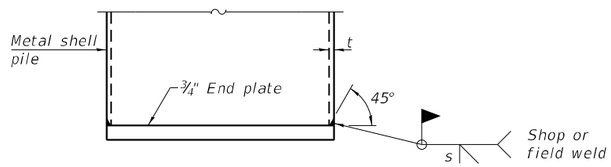

s = t - 1/8"

END PLATE ATTACHMENT

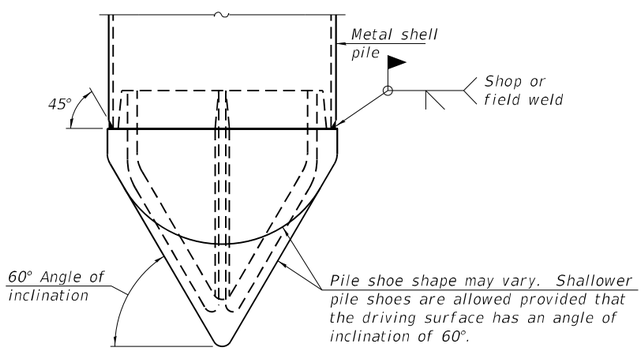

PILE SHOE ATTACHMENT

(When called for on the plans, the Contractor shall furnish metal shell pile shoes consisting of a single piece conical pile point as shown. The pile shoes shall be cast in one piece steel according to either ASTM A 148 Grade 80-50 or AASHTO M 103 Grade 65-35 and shall provide full bearing over the full circumference of the metal shell pile. The pile shoe shall have tapered leads to assure proper alignment and fitting and shall be secured to the pile with a circumferential weld).

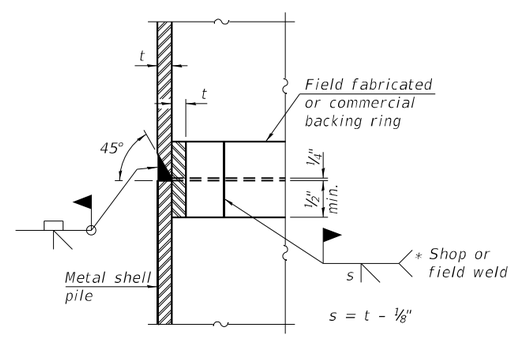

s = t - 1/8"

COMPLETE PENETRATION WELD SPLICE

* Field fabricated backing ring may be made from pile shell by removing segment to allow reducing circumference and vertically rejoin with partial joint penetration weld.

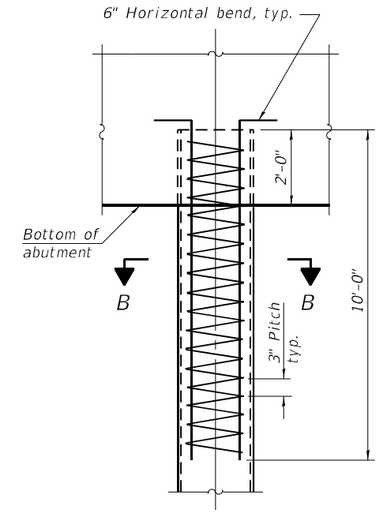

ELEVATION

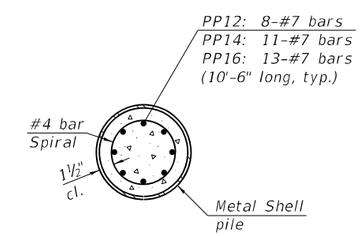

SECTION B-B

REINFORCEMENT AT ABUTMENTS

(Omit when concrete encasement is specified)

Note:
The metal shell piles shall be according to Article 1006.05 of the Standard Specifications.

F-MS 5-15-2023

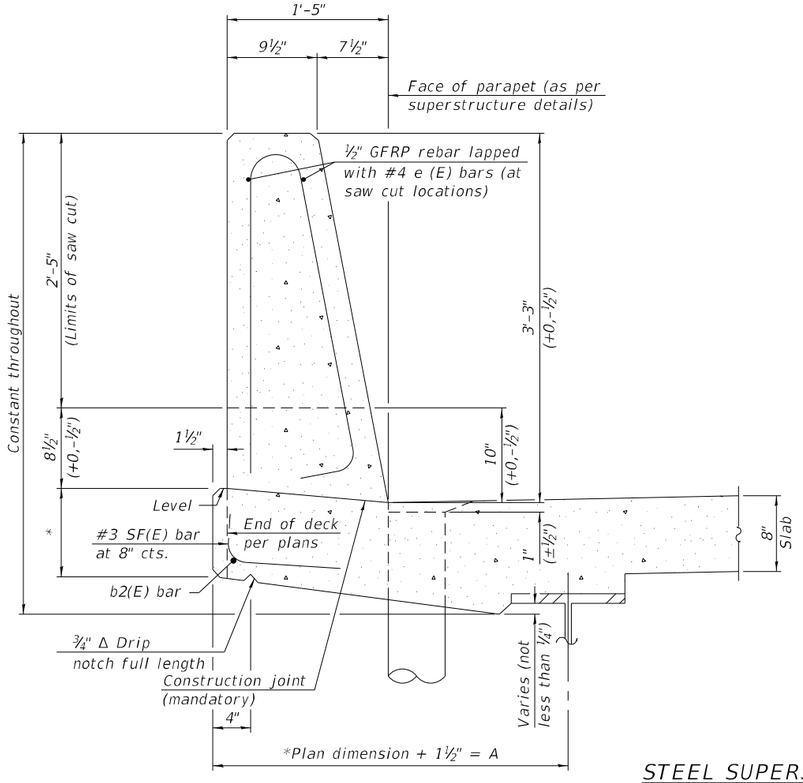

39" CONSTANT-SLOPE PARAPET SECTION

(Showing dimensions, d(E), and ½" Ø GFRP rebar)

STEEL SUPERSTRUCTURES

*See Superstructure Details.

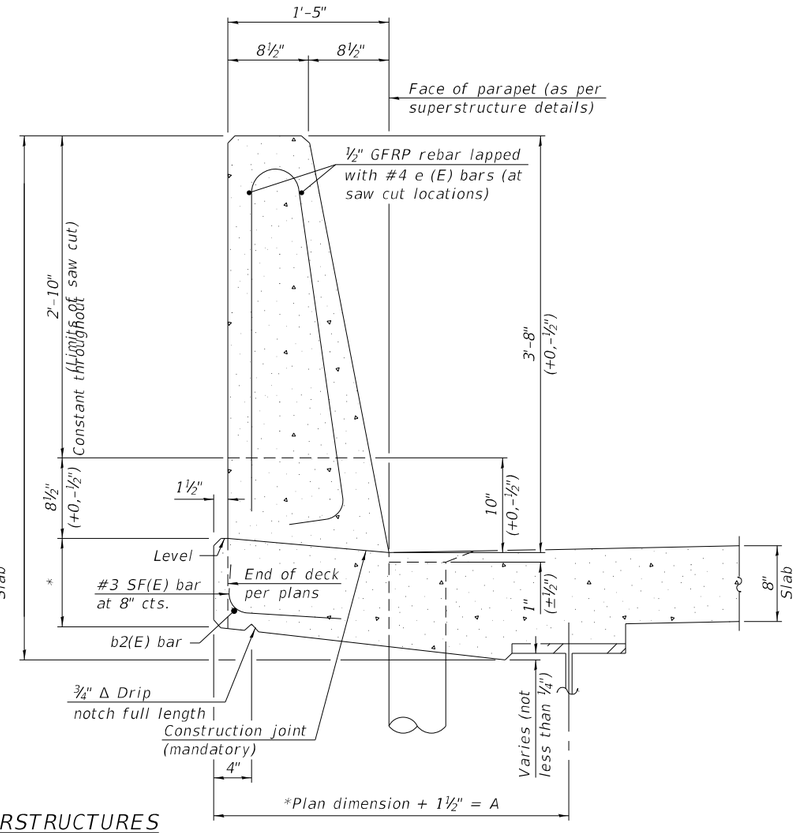

44" CONSTANT-SLOPE PARAPET SECTION

(Showing dimensions, d(E), and ½" Ø GFRP rebar)

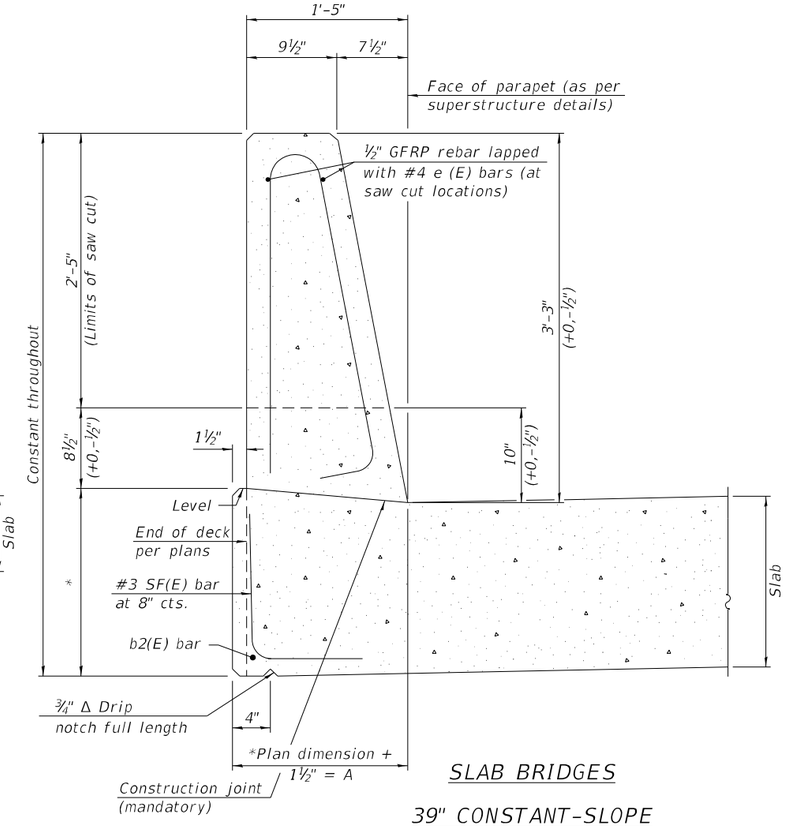

SLAB BRIDGES

39" CONSTANT-SLOPE PARAPET SECTION

(Showing dimensions, d(E), and ½" Ø GFRP rebar)

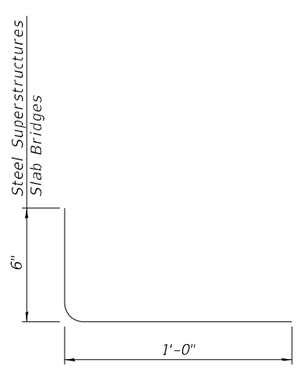

SF(E) BAR

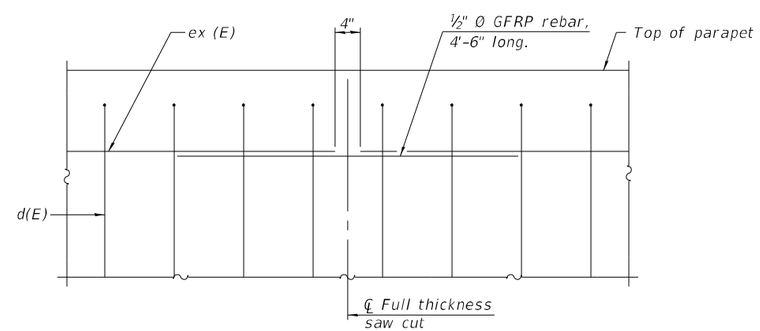

DETAIL - GFRP REBAR STIFFENING ELEVATION

(Place as shown in parapet section at each parapet joint location.)

Notes:

All dimensions shall remain the same as shown on superstructure details, except dimension "A" which is to be revised as shown.

Additional concrete needed to revise dimension "A" (39" and 44" parapets):

Steel Superstructure: 0.00348 cu. yds./ft.

Slab Bridge Superstructure: cu. yds./ft.

Place full depth aluminum sheets as shown on superstructure details.

Replace all cork joint filler locations with a full thickness saw cut.

Steel and slab superstructure shown. Other superstructure types similar.

SFP 39-44 10/27/2023

MODEL: Default
FILE NAME: pw:\\pwidrus\cen01:HDR_US_Central_01\Documents\ILDOT\OSEH_IDOT_IL115_Br_Replac_WO_6\6.0_CAD_BIM\6.2_WIP\6.2.3_CADD Sheets\Structures_HDR\Concrete Parapet Slip Forming Option

2/13/2025 10:50:31 AM

HDR ENGINEERING, INC.
9450 W. BRYN MAWR AVE.
ROSEMONT, IL 60018

USER NAME =	DESIGNED - AMN	REVISED -	
	CHECKED - WL	REVISED -	
PLOT SCALE =	DRAWN - AMN	REVISED -	
PLOT DATE = 2/13/2025	CHECKED - WL	REVISED -	

STATE OF ILLINOIS
DEPARTMENT OF TRANSPORTATION

CONCRETE PARAPET SLIP FORMING OPTION
STRUCTURE NO. 027-0105

SHEET 18 OF 20 SHEETS

F.A.P. RTE.	SECTION	COUNTY	TOTAL SHEETS	SHEET NO.
796	(106BR-2)BR	FORD	55	44

CONTRACT NO. 66B58

ILLINOIS FED. AID PROJECT

Illinois Department of Transportation
Division of Highways
District #3, Ottawa

SOIL BORING LOG

Date 10/27/09

ROUTE FAP-796 (IL 115) DESCRIPTION IL 115 over Drainage Ditch, 3.7 miles South of IL 116 LOGGED BY Larry Myers

SECTION (106 BR-2)BR LOCATION S.E. 1/4, SEC. 8, TWP. 27N, RNG. 9E

COUNTY Ford DRILLING METHOD Hollow Stem Auger HAMMER TYPE CME Automatic

STRUCT. NO. 027-0074 (Existing)
Station 1665+79

BORING NO. 1 (South Abut.)
Station 1666+29
Offset 12.00ft Lt.
Ground Surface Elev. 657.30 ft

Surface Water Elev. 644.50 ft
Stream Bed Elev. 641.22 ft

Groundwater Elev.:
First Encounter 627.3 ft ▼
Upon Completion 627.3 ft ▽
After ____ Hrs. ____ ft

Description	Elev.	DEPTH (ft)	BLOWS (/6")	UCS Qu (tsf)	MOIST (%)
Augered White Shoulder Stone & Gray Silty Clay Loam Till Fill					
	654.80				
Stiff Gray Silty Clay Loam/Sandy Clay Loam Till Fill			3		
			3	1.5	17.9
			3	P	
		-5			
			2		
			3	1.5	27.4
			3	P	
			2		
			2	1.5	25.4
			3	P	
	647.80				
Soft to Medium Gray & Brown Silty Clay Loess		-10			
			1		
			1	1.0	24.2
			2	P	
			1		
			2	1.0	24.8
			3	P	
	642.30	-15			
Hard Gray Silty Clay Loam Till			4		
			4	5.6	17.6
			7	S	
			7		
			10	>4.5	17.6
			10	P	
	637.30	-20			
Very Stiff to Stiff Brownish Gray Silty Clay Loam/Clay Loam Till			4		
			3	3.0	17.1
			7	P	
			3		
			3	1.5	15.9
			5	B	
	632.30	-25			
Hard Gray Silty Clay Loam/Silty Loam Till			3		
			7	>4.5	14.6
			11	P	
	630.30				
Dense Gray Fine to Coarse Sand with Minor Fine Gravel & Silt Layers & Silty Clay Loam Till Layers (washed sample 35'-36.5')			7		
			14		15.2
			16		
		▼-30			
			9		
			14		17.1
			18		
			10		
			18		19.9
			18		
		-35			
			15		
			20		17.6
			26		
			10		
			10		21.3
			20		
	617.80				
Hard Gray Silty Clay Loam Till		-40			

The Unconfined Compressive Strength (UCS) Failure Mode is indicated by (B-Bulge, S-Shear, P-Penetrometer)
The SPT (N value) is the sum of the last two blow values in each sampling zone (AASHTO T206)

BBS, from 137 (Rev. 8-99)

Illinois Department of Transportation
Division of Highways
District #3, Ottawa

SOIL BORING LOG

Date 10/27/09

ROUTE FAP-796 (IL 115) DESCRIPTION IL 115 over Drainage Ditch, 3.7 miles South of IL 116 LOGGED BY Larry Myers

SECTION (106 BR-2)BR LOCATION S.E. 1/4, SEC. 8, TWP. 27N, RNG. 9E

COUNTY Ford DRILLING METHOD Hollow Stem Auger HAMMER TYPE CME Automatic

STRUCT. NO. 027-0074 (Existing)
Station 1665+79

BORING NO. 1 (South Abut.)
Station 1666+29
Offset 12.00ft Lt.
Ground Surface Elev. 657.30 ft

Surface Water Elev. 644.50 ft
Stream Bed Elev. 641.22 ft

Groundwater Elev.:
First Encounter 627.3 ft ▼
Upon Completion 627.3 ft ▽
After ____ Hrs. ____ ft

Description	Elev.	DEPTH (ft)	BLOWS (/6")	UCS Qu (tsf)	MOIST (%)
Hard Gray Silty Clay Loam Till *(continued)*			7		
			11	>4.5	12.6
			15	P	
			7		
			10	7.2	11.3
			18	S	
	612.80				
Hard Brown Sandy Clay Loam Till		-45			
			10		
			18	8.5	10.4
			18	S	
	610.30				
Hard Green Sandy Clay Loam Till with Large Gravel Pieces			10		
			22	9.2	12.2
			38	S	
		-50			
			12		
			20	8.9	11.3
			30	S	
	605.30				
Hard Gray/Brown Sandy Clay Loam Till with Sand & Silt Pockets, Very Dense & Brittle			17		
			69	>4.5	10.2
			100/3"	P	
		-55			
			38		
			43	10.8	9.4
			72	S	
	600.80				
End of Boring					
		-60			

The Unconfined Compressive Strength (UCS) Failure Mode is indicated by (B-Bulge, S-Shear, P-Penetrometer)
The SPT (N value) is the sum of the last two blow values in each sampling zone (AASHTO T206)

BBS, from 137 (Rev. 8-99)

MODEL: Default
FILE NAME: pw:\\pwhdrascen01-HDR_US_Central_01\Documents\ILDOT\OSEH_IDOT_IL115_Br_Replac_WO_6\6.0_CAD_BIM\6.2_WIP\6.2.3_CADD Sheets\Structures_OSEH\0161669-62723-XX-SOIL-B-LOG1.dgn

OSEH inc.
910 W. VAN BUREN ST
SUITE 603
CHICAGO, IL 60607
WWW.OSEHINC.COM

USER NAME =	DESIGNED – FL	REVISED –
	CHECKED – WL	REVISED –
PLOT SCALE =	DRAWN – FL	REVISED –
PLOT DATE = 2/13/2025	CHECKED – WL	REVISED –

STATE OF ILLINOIS
DEPARTMENT OF TRANSPORTATION

SOIL BORING LOGS
STRUCTURE NO. 027-0105

F.A.P. RTE.	SECTION	COUNTY	TOTAL SHEETS	SHEET NO.
796	(106BR-2)BR	FORD	55	45

CONTRACT NO. 66B58
ILLINOIS FED. AID PROJECT

2/13/2025 10:50:54 AM

Illinois Department of Transportation
Division of Highways
District #3, Ottawa

SOIL BORING LOG

Date 10/28/09

ROUTE FAP-796 (IL 115) DESCRIPTION IL 115 over Drainage Ditch, 3.7 miles South of IL 116 LOGGED BY Larry Myers

SECTION (106 BR-2)BR LOCATION S.E. 1/4, SEC. 8, TWP. 27N, RNG. 9E

COUNTY Ford DRILLING METHOD Hollow Stem Auger HAMMER TYPE CME Automatic

STRUCT. NO. 027-0074 (Existing)
Station 1665+79

BORING NO. 2 (North Abut.)
Station 1665+32
Offset 12.00ft Rt.
Ground Surface Elev. 657.34 ft

Surface Water Elev. 644.5 ft
Stream Bed Elev. 641.22 ft

Groundwater Elev.:
First Encounter 627.3 ft ▼
Upon Completion 627.3 ft ▽
After ____ Hrs. ____ ft

Description	Elev.	DEPTH (ft)	BLOWS (/6")	UCS Qu (tsf)	MOIST (%)
Augered White Shoulder Stone & Black/Gray Silty Clay Loam Till Fill					
	654.84				
Very Stiff Black & Gray Silty Clay/Silty Clay Loam Topsoil & Till Fill			3		
			4	2.8	22.5
			4	P	
		-5			
			2		
			3	2.5	33.0
			4	P	
			1		
			2	2.0	25.3
	648.34		2	P	
Medium to Stiff Gray Silty Clay/Loam		-10			
			wh		
			1	1.0	24.5
			2	P	
	645.34				
Very Soft Brown Silt with Minor Clay			wh		
			2	0	24.8
			2	P	
	642.34	-15			
Hard Gray Silty Clay Loam Till			2		
			4	5.8	18.3
			6	S	
			5		
			7	6.4	17.3
			9	S	
		-20			

Description	Elev.	DEPTH (ft)	BLOWS (/6")	UCS Qu (tsf)	MOIST (%)
Hard Gray Silty Clay Loam Till *(continued)*			4		
			5	6.2	22.2
			7	S	
	634.84				
Stiff Gray Silty Loam Till with Heavy Silt Layers			2		
			4	1.5	26.7
			6	P	
	632.84				
Hard Gray Silty Clay Loam Till		-25			
			2		
			4	4.2	13.7
			6	B	
	630.34				
Dense Gray Loamy Fine to Coarse Sand with Minor Till Seams			7		
			13		11.9
			17		
	627.84				
Hard Gray Silty Clay Loam Till with Layers of Silt @ 34' & Free Water (sample 30'-31.5' max Rimac @ 5.0%)		▽ -30			
			9		
			13	11.5	11.9
			24	S	
			3		
			9	8.4	24.0
			16	S	
	623.34				
Very Dense Gray Fine to Coarse Sand (washed sample 35'-36.5')		-35			
			15		
			25		12.2
			25		
			10		
			20		12.4
			24		
	617.84				
		-40			

The Unconfined Compressive Strength (UCS) Failure Mode is indicated by (B-Bulge, S-Shear, P-Penetrometer)
The SPT (N value) is the sum of the last two blow values in each sampling zone (AASHTO T206)

BBS, from 137 (Rev. 8-99)

Illinois Department of Transportation
Division of Highways
District #3, Ottawa

SOIL BORING LOG

Date 10/28/09

ROUTE FAP-796 (IL 115) DESCRIPTION IL 115 over Drainage Ditch, 3.7 miles South of IL 116 LOGGED BY Larry Myers

SECTION (106 BR-2)BR LOCATION S.E. 1/4, SEC. 8, TWP. 27N, RNG. 9E

COUNTY Ford DRILLING METHOD Hollow Stem Auger HAMMER TYPE CME Automatic

STRUCT. NO. 027-0074 (Existing)
Station 1665+79

BORING NO. 2 (North Abut.)
Station 1665+32
Offset 12.00ft Rt.
Ground Surface Elev. 657.34 ft

Surface Water Elev. 644.5 ft
Stream Bed Elev. 641.22 ft

Groundwater Elev.:
First Encounter 627.3 ft ▼
Upon Completion 627.3 ft ▽
After ____ Hrs. ____ ft

Description	Elev.	DEPTH (ft)	BLOWS (/6")	UCS Qu (tsf)	MOIST (%)
Hard Gray Silty Clay Loam Till (sample 42.5'-46.5' max Rimac @ 5.0%) *(continued)*			7		
			9	7.4	11.5
			13	S	
			9		
			15	11.5	13.2
			18	S	
		-45			
			10		
			16	11.5	12.0
			23	S	
	609.34				
Hard Brittle Gray Silty Clay Loam/Silty Loam Till					
		-50			
			18		
			28	8.2	9.3
			39	S	
	605.84				
End of Boring					
		-55			
		-60			

The Unconfined Compressive Strength (UCS) Failure Mode is indicated by (B-Bulge, S-Shear, P-Penetrometer)
The SPT (N value) is the sum of the last two blow values in each sampling zone (AASHTO T206)

BBS, from 137 (Rev. 8-99)

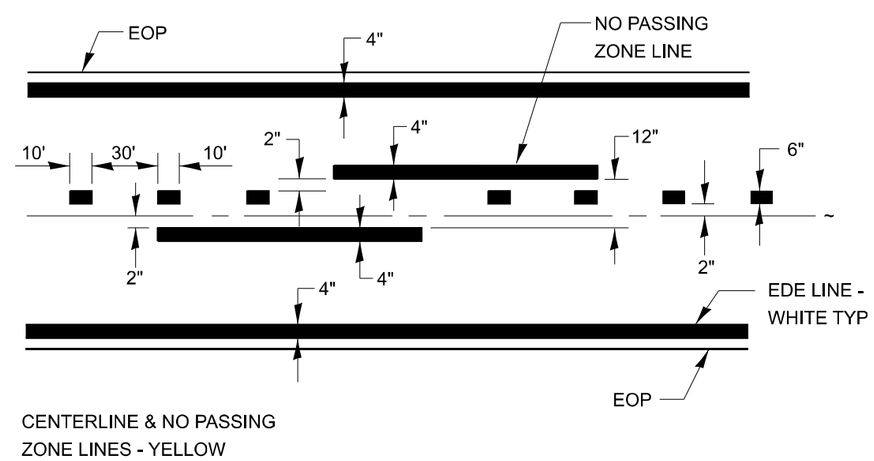

PAVEMENT MARKING

MODEL: Default
FILE NAME: Z:\Shared\Projects\IDOT\IDOT-003-000003 Design\02_CADD Sheets\W04\0366858-IH-33roadway-details - 1.dgn

OSEH inc. 300 W. VAN BUREN STREET SUITE 400 CHICAGO, IL 60607 WWW.OSEI-INC.COM	USER NAME = AlexDefrancesco	DESIGNED - AA	REVISED -	STATE OF ILLINOIS DEPARTMENT OF TRANSPORTATION	DISTRICT DETAILS	F.A.P RTE.	SECTION	COUNTY	TOTAL SHEETS / SHEET NO.
		DRAWN - AA	REVISED -			796	(106BR-2)BR	FORD	55 / 47
	PLOT SCALE = 40.0000 ' / in.	CHECKED - MM	REVISED -					CONTRACT NO. 66B58	
	PLOT DATE = 2/24/2025	DATE - 2/24/2025	REVISED -		SCALE: SHEET 1 OF 2 SHEETS STA. TO STA.		ILLINOIS	FED. AID PROJECT	

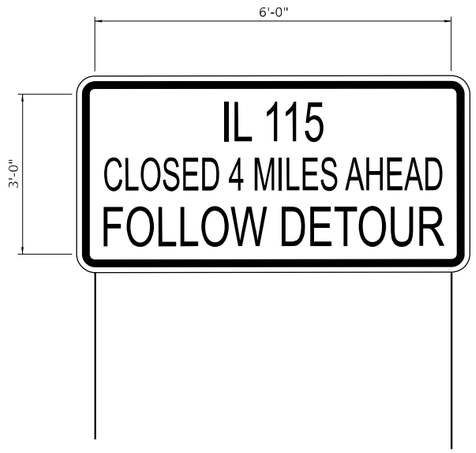

TEMPORARY INFROMATION SIGNING

NOTES:

1. USE 6" D BLACK LETTERING ON FLUORESCENT ORANGE BACKGROUND.
2. ERECT SIGNS AT LOCATIONS IN ADVANCE OF THE "DETOUR AHEAD" SIGNS AS DIRECTED BY THE ENGINEER.
3. ERECT SIGN A MINIMUM OF ONE WEEK PRIOR TO THE START OF THE ROAD CLOSURE.
4. SEE SPECIAL PROVISION "TEMPORARY INFORMATION SIGNING" FOR ADDITIONAL INFORMATION.
5. WILL BE PAID FOR PER SQ FT AS "TEMPORARY INFORMATION SIGNING". EACH SIGN = 18 SQ FT.

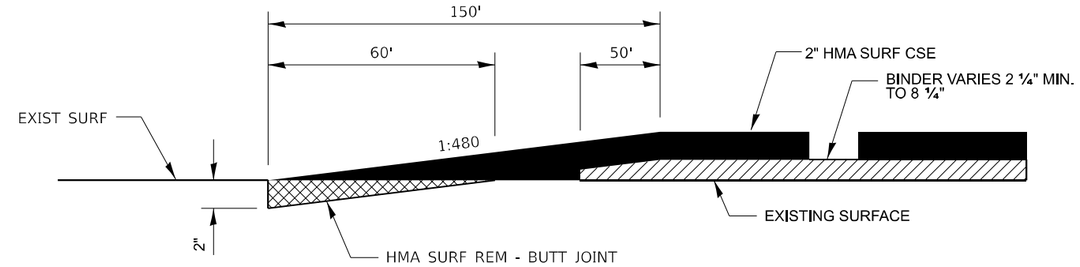

HMA DETAIL AT BUTT JOINT

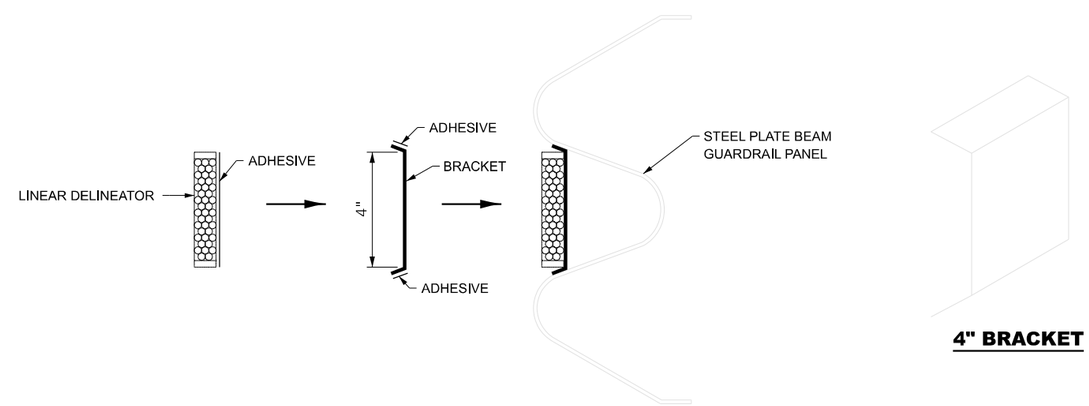

4" BRACKET

LINEAR DELINEATOR APPLICATION TO STANDARD GALVANIZED GUARDRAIL

LINEATOR DELINEATOR SHALL BE APLLIED ACCORDING TO THE MANUFACTURER'S RECOMMENDATIONS

MODEL: Default
FILE NAME: Z:\Shared\Projects\IDOT\IDOT-003-000003 Design\02_CADD Sheets\W04\0356858-IH-039roadway-details - 2.dgn

OSEH inc. 300 W. VAN BUREN STREET SUITE 400 CHICAGO, IL 60607 WWW.OSE-INC.COM	USER NAME = AlexDefrancesco	DESIGNED - AA	REVISED -	STATE OF ILLINOIS DEPARTMENT OF TRANSPORTATION	DISTRICT DETAILS	F.A.P RTE.	SECTION	COUNTY	TOTAL SHEETS / SHEET NO.
		DRAWN - AA	REVISED -			796	(106BR-2)BR	FORD	55 / 48
	PLOT SCALE = 40.0000 ' / in.	CHECKED - MM	REVISED -					CONTRACT NO. 66B58	
	PLOT DATE = 2/24/2025	DATE - 2/24/2025	REVISED -		SCALE: SHEET 2 OF 2 SHEETS STA. TO STA.		ILLINOIS	FED. AID PROJECT	

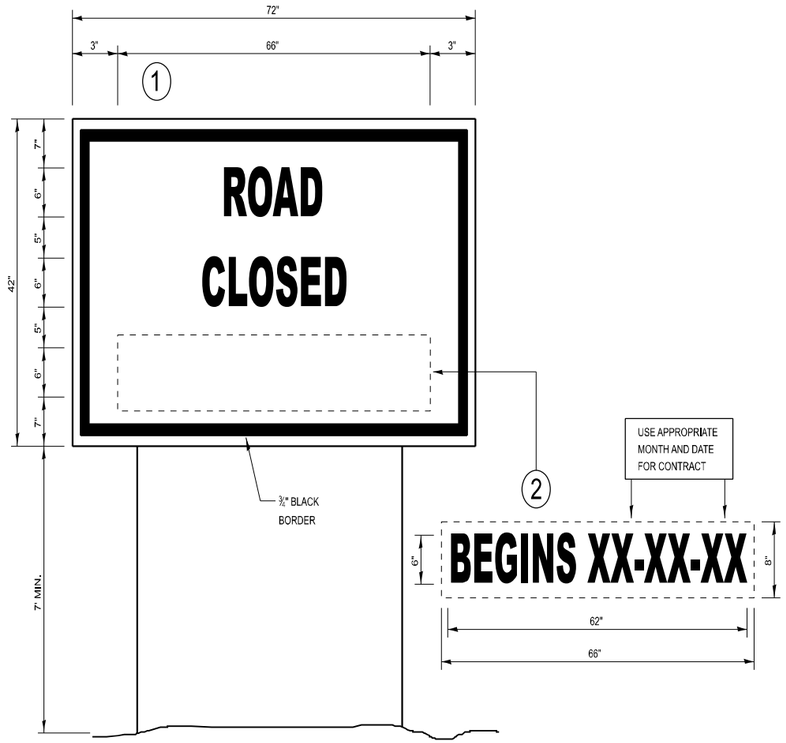

TEMPORARY INFORMATION SIGNING

NOTES:

1. USE 6" D BLACK LETTERING ON FLUORESCENT ORANGE BACKGROUND.
2. ERECT SIGNS AT LOCATIONS IN ADVANCE OF THE "ROAD CONSTRUCTION AHEAD" SIGNS AS DIRECTED BY THE ENGINEER.
3. ERECT SIGN 1 WITH INSTALLED PANEL 2 A MINIMUM OF ONE WEEK PRIOR TO THE START OF THE ROAD CLOSURE.
4. REMOVE PANEL 2 ON THAT DATE.
5. SEE SPECIAL PROVISION "TEMPORARY INFORMATION SIGNING" FOR ADDITIONAL INFORMATION.
6. WILL BE PAID FOR PER SQ FT AS "TEMPORARY INFORMATION SIGNING". EACH SIGN = 21 SQ FT AND THE DATE PANEL 2 WILL NOT BE MEASURED SEPARATELY FOR PAYMENT.

MODEL: Default
FILE NAME: ZS:Shared:Projects:IDOT:IDOT-003-000003_Design:02_CADD_Sheets:W2#6103366858-sht-03roadway-details - 3.dgn

OSEH inc. 910 W. VAN BUREN STREET SUITE 601 CHICAGO, IL 60607 WWW.OSEHINC.COM	USER NAME = AlexDefrancesco	DESIGNED - AA	REVISED -	STATE OF ILLINOIS DEPARTMENT OF TRANSPORTATION	DISTRICT DETAILS
		DRAWN - AA	REVISED -		
	PLOT SCALE = 40.0000 ' / in.	CHECKED - MM	REVISED -		
	PLOT DATE = 2/24/2025	DATE - 2/24/2025	REVISED -		SCALE: SHEET 2 OF 2 SHEETS STA. TO STA.

F.A.P RTE.	SECTION	COUNTY	TOTAL SHEETS	SHEET NO.
796	(106BR-2)BR	FORD	55	49
		CONTRACT NO. 66B58		
	ILLINOIS	FED. AID PROJECT		

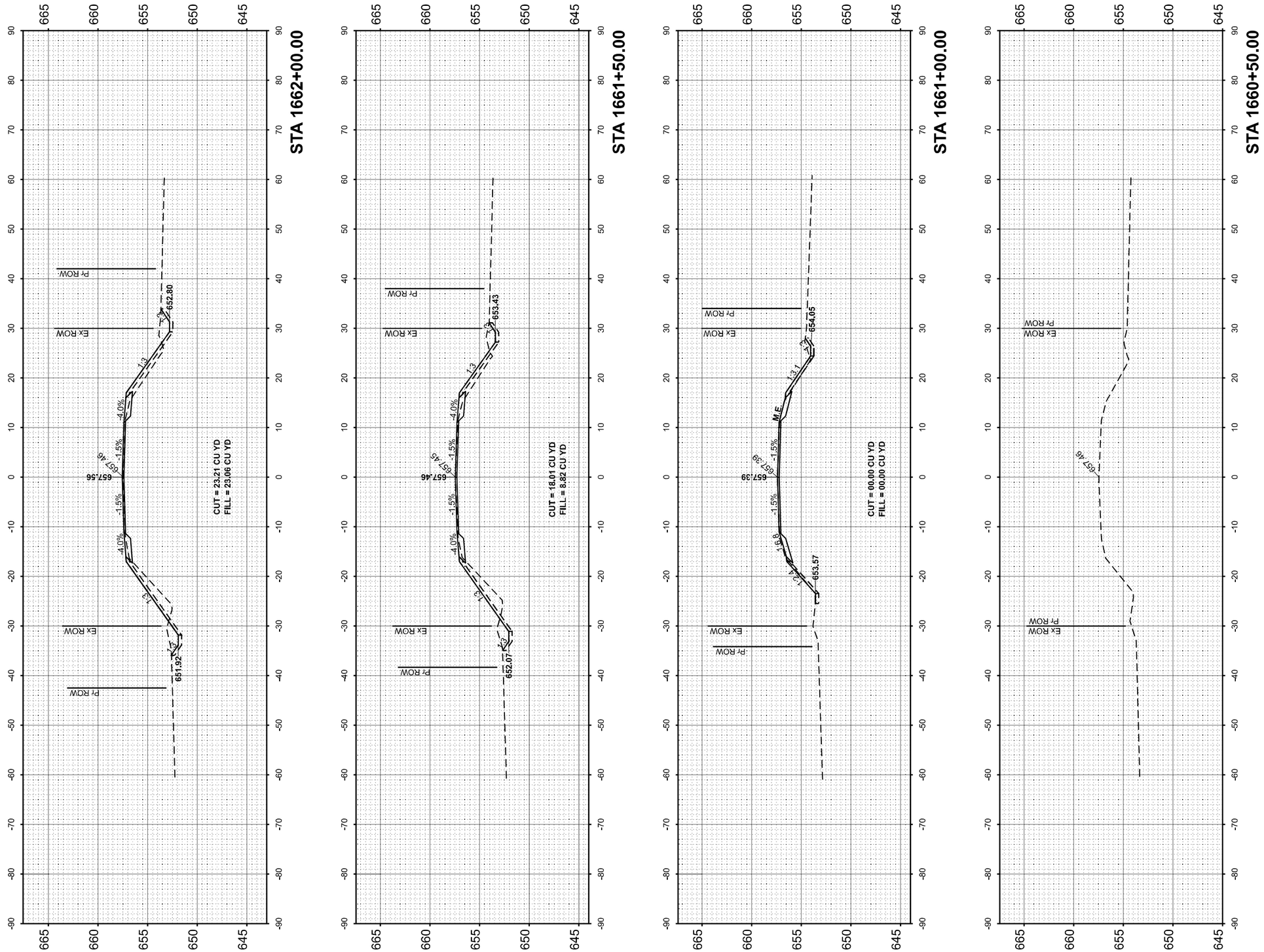

FINAL SURVEY		BY	DATE
NOTE BOOK	SURVEYED		
	PLOTTED		
	TEMPLATE		
	AREAS		
NO.	AREAS CHECKED		

ORIGINAL SURVEY		BY	DATE
NOTE BOOK	SURVEYED		
	PLOTTED		
	TEMPLATE		
	AREAS		
NO.	AREAS CHECKED		

MODEL: ExRt-IL115 - 1660+50.00 [Sheet]
FILE NAME: Z:\Shared\Projects\IDOT\BDO7-0034-00\03_Design\02_CADD Sheets\WO\66D358B58-dlh-xsrhl.dgn

OSEH inc. 559 W. VAN BUREN STREET SUITE 400 CHICAGO, IL 60607 WWW.OSEHINC.COM

USER NAME = --	DESIGNED - AA	REVISED -	
	DRAWN - AA	REVISED -	
PLOT SCALE = 0.16666633 ' / in.	CHECKED - MM	REVISED -	
PLOT DATE = 2/24/2025	DATE - 2/24/2025	REVISED -	

STATE OF ILLINOIS
DEPARTMENT OF TRANSPORTATION

IL 115
CROSS SECTIONS

SCALE: | SHEET 1 OF 6 SHEETS | STA. 1660+50 TO STA. 1662+00

F.A.P. RTE.	SECTION	COUNTY	TOTAL SHEETS	SHEET NO.
796	(106BR-2)BR	FORD	38	50
		CONTRACT NO. 66B58		
		ILLINOIS	FED. AID PROJECT	

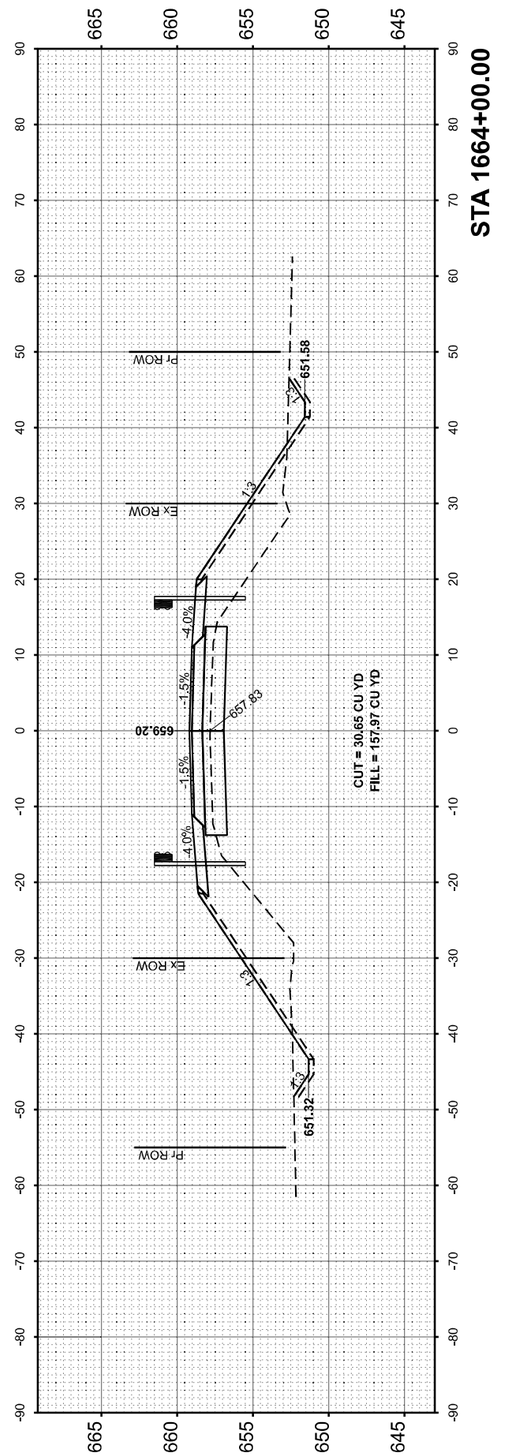

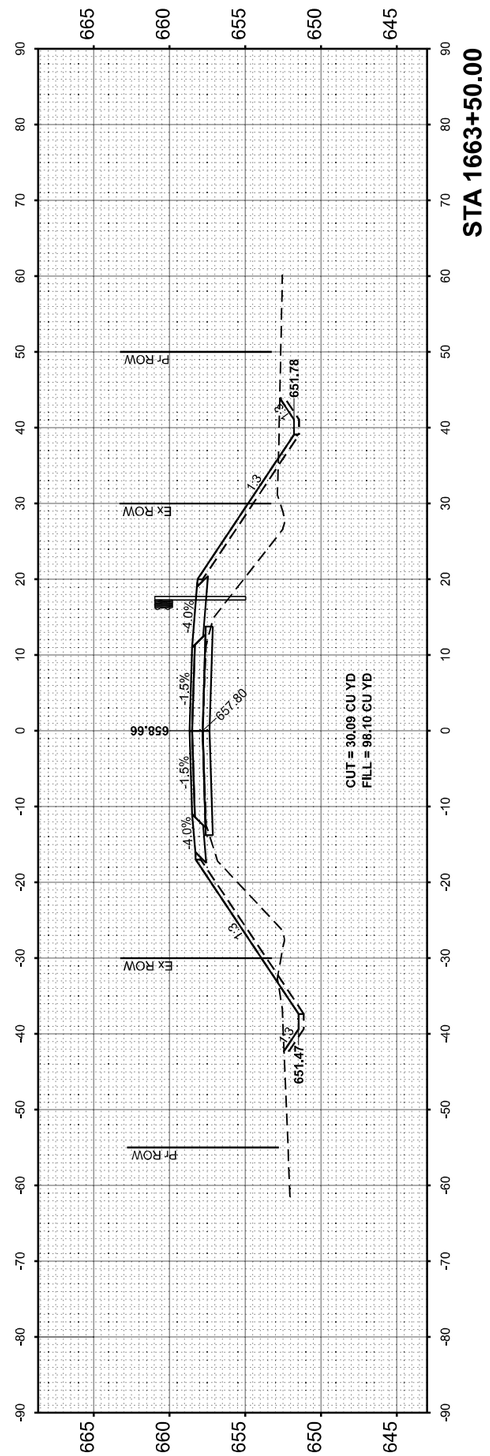

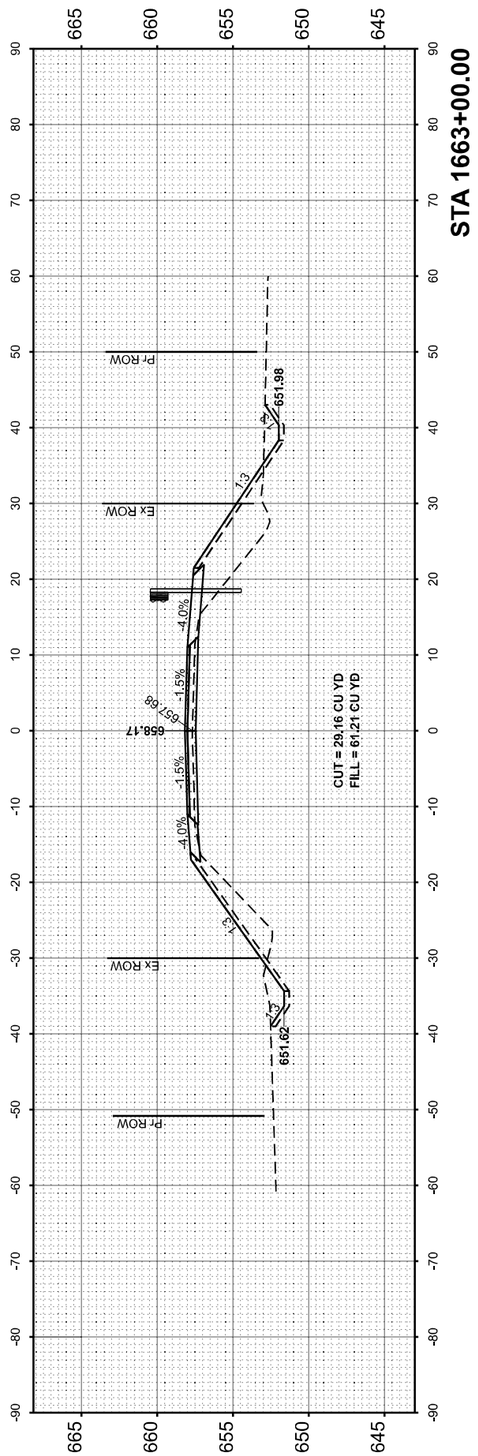

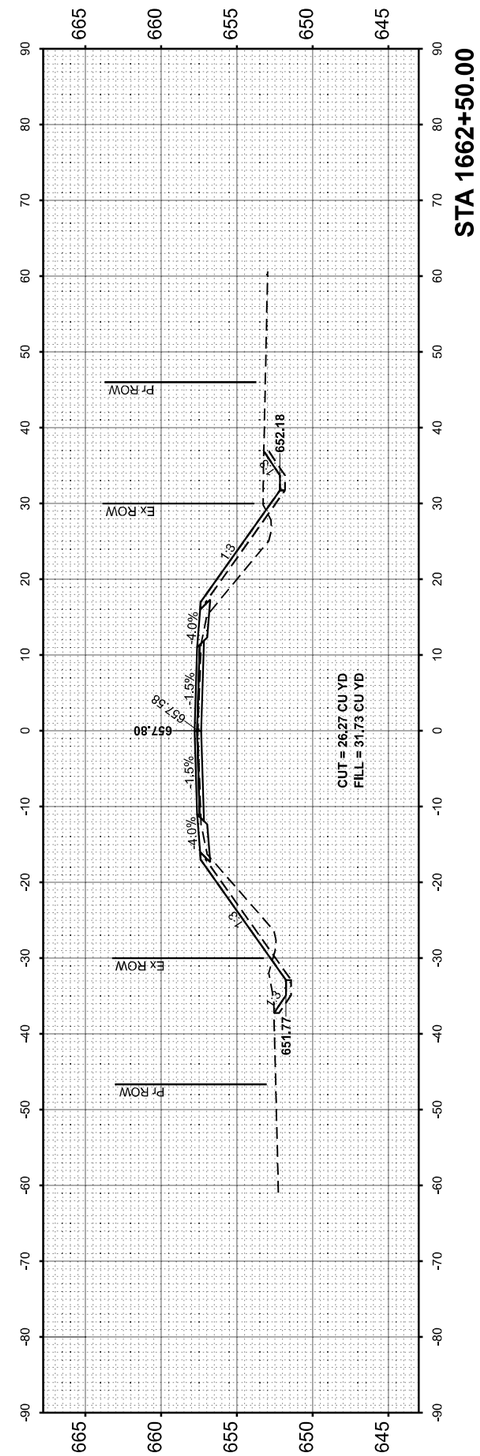

FINAL SURVEY		BY	DATE
NOTE BOOK	SURVEYED		
	PLOTTED		
	TEMPLATE		
	AREAS		
NO.	AREAS CHECKED		

ORIGINAL SURVEY		BY	DATE
NOTE BOOK	SURVEYED		
	PLOTTED		
	TEMPLATE		
	AREAS		
NO.	AREAS CHECKED		

MODEL: Ex9L-IL115 - 1662+50.00 [Sheet]
FILE NAME: Z:\Shared\Projects\IDOT\IDOT-0030-00\03_Design\02_CADD Sheets\WOR6\D356B58-sht-xsts1.dgn

OSEH inc. 310 W. VAN BUREN STREET SUITE 603 CHICAGO, IL 60607 WWW.OSEHINC.COM

USER NAME = --	DESIGNED - AA	REVISED -	
	DRAWN - AA	REVISED -	
PLOT SCALE = 0.16666633 ' / in.	CHECKED - MM	REVISED -	
PLOT DATE = 2/24/2025	DATE - 2/24/2025	REVISED -	

STATE OF ILLINOIS
DEPARTMENT OF TRANSPORTATION

IL 115
CROSS SECTIONS

SCALE: | SHEET 2 OF 6 SHEETS | STA. 1662+50 TO STA. 1664+00

F.A.P. RTE.	SECTION	COUNTY	TOTAL SHEETS	SHEET NO.
796	(106BR-2)BR	FORD	55	51

CONTRACT NO. 66B58

ILLINOIS | FED. AID PROJECT

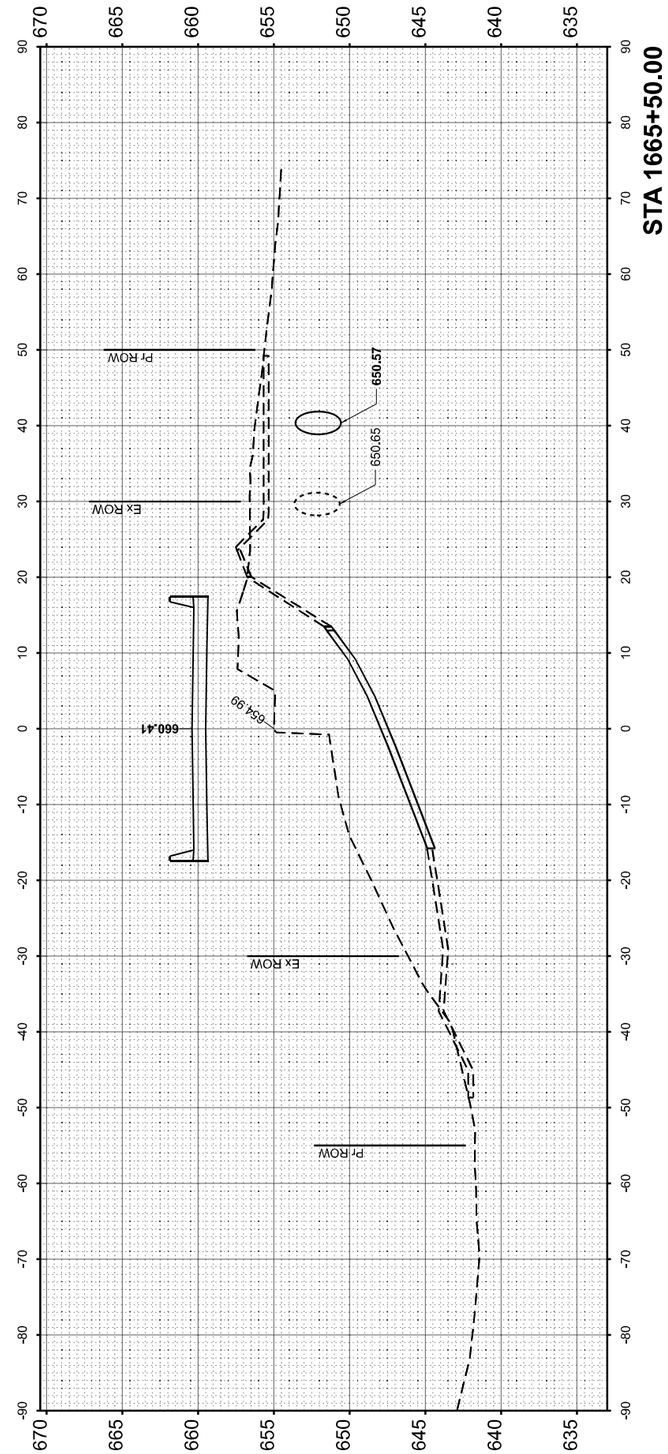

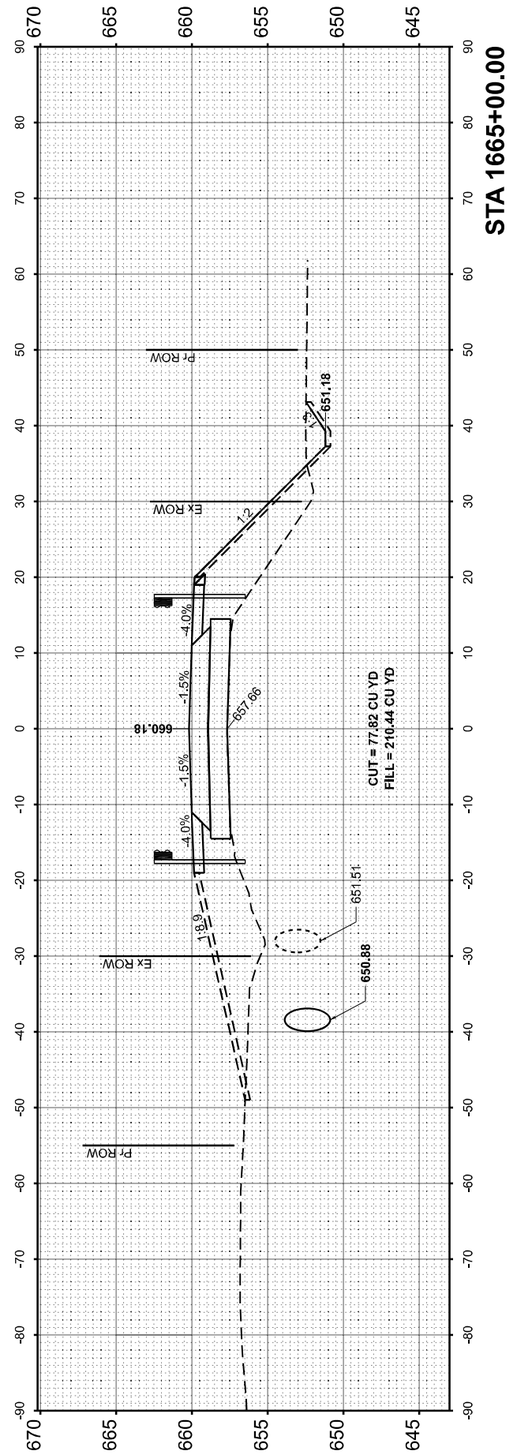

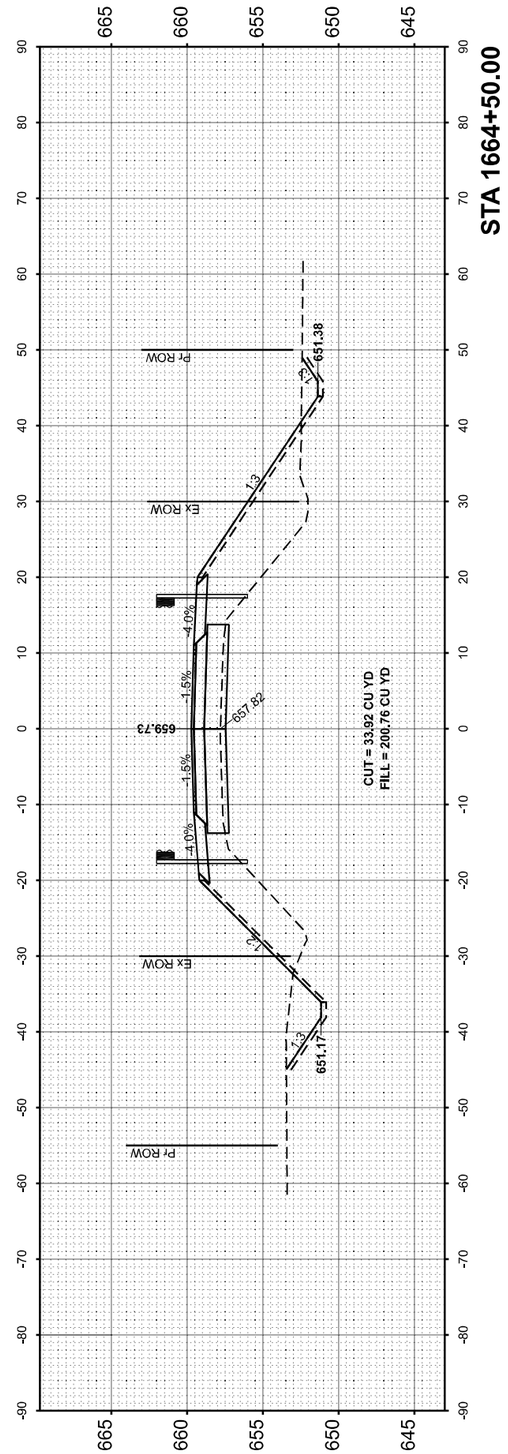

FINAL SURVEY		BY	DATE
NOTE BOOK	SURVEYED		
	PLOTTED		
	TEMPLATE		
	AREAS		
NO.	AREAS CHECKED		

ORIGINAL SURVEY		BY	DATE
NOTE BOOK	SURVEYED		
	PLOTTED		
	TEMPLATE		
	AREAS		
NO.	AREAS CHECKED		

MODEL: ExBL-IL115 - 1664+50.00 [Sheet]
FILE NAME: Z:\Shared\Projects\IDOT\IDOT-003-000\03_Design\02_CADD Sheets\WO#6\D366B58-sht-xsch.dgn

OSEH inc. 910 W. VAN BUREN STREET SUITE 600 CHICAGO, IL 60607 WWW.OSEHINC.COM

USER NAME = --	DESIGNED - AA	REVISED -	
	DRAWN - AA	REVISED -	
PLOT SCALE = 0.16666633 ' / in.	CHECKED - MM	REVISED -	
PLOT DATE = 2/24/2025	DATE - 2/24/2025	REVISED -	

STATE OF ILLINOIS
DEPARTMENT OF TRANSPORTATION

IL 115
CROSS SECTIONS

SCALE: | SHEET 3 OF 6 SHEETS | STA. 1664+50 | TO STA. 1665+50

F.A.P. RTE.	SECTION	COUNTY	TOTAL SHEETS	SHEET NO.
796	(106BR-2)BR	FORD	55	52
		CONTRACT NO. 66B58		
		ILLINOIS	FED. AID PROJECT	

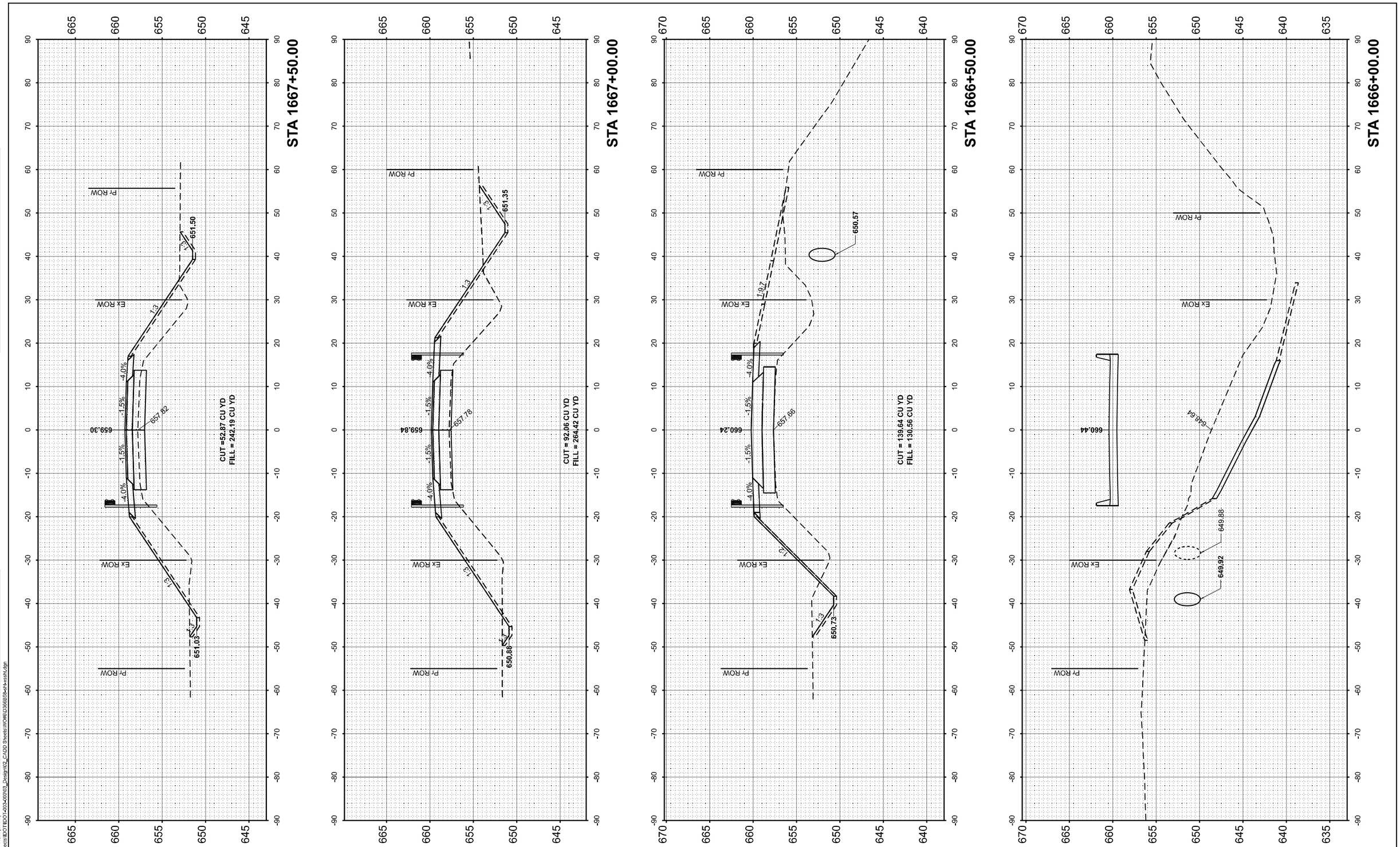

FINAL SURVEY		BY	DATE
NOTE BOOK	SURVEYED		
	PLOTTED		
	TEMPLATE		
	AREAS		
NO.	AREAS CHECKED		

ORIGINAL SURVEY		BY	DATE
NOTE BOOK	SURVEYED		
	PLOTTED		
	TEMPLATE		
	AREAS		
NO.	AREAS CHECKED		

MODEL: EvBL115 - 1666+00.00 [Sheet]
FILE NAME: Z:\Shared\Projects\IDOT\IDOT-003-00\03_Design\02_CADD Sheets\WORK\D356E58-sht-xsprf.dgn

OSEH inc. 910 W. VAN BUREN STREET SUITE 620 CHICAGO, IL 60607 WWW.OSEHINC.COM

USER NAME = --	DESIGNED - AA	REVISED -	
	DRAWN - AA	REVISED -	
PLOT SCALE = 0.16666633 ' / in.	CHECKED - MM	REVISED -	
PLOT DATE = 2/24/2025	DATE - 2/24/2025	REVISED -	

STATE OF ILLINOIS
DEPARTMENT OF TRANSPORTATION

IL 115
CROSS SECTIONS

SCALE: | SHEET 4 OF 6 SHEETS | STA. 1666+00 TO STA. 1667+50

F.A.P. RTE.	SECTION	COUNTY	TOTAL SHEETS	SHEET NO.
796	(106BR-2)BR	FORD	55	53
		CONTRACT NO. 66B58		
	ILLINOIS	FED. AID PROJECT		

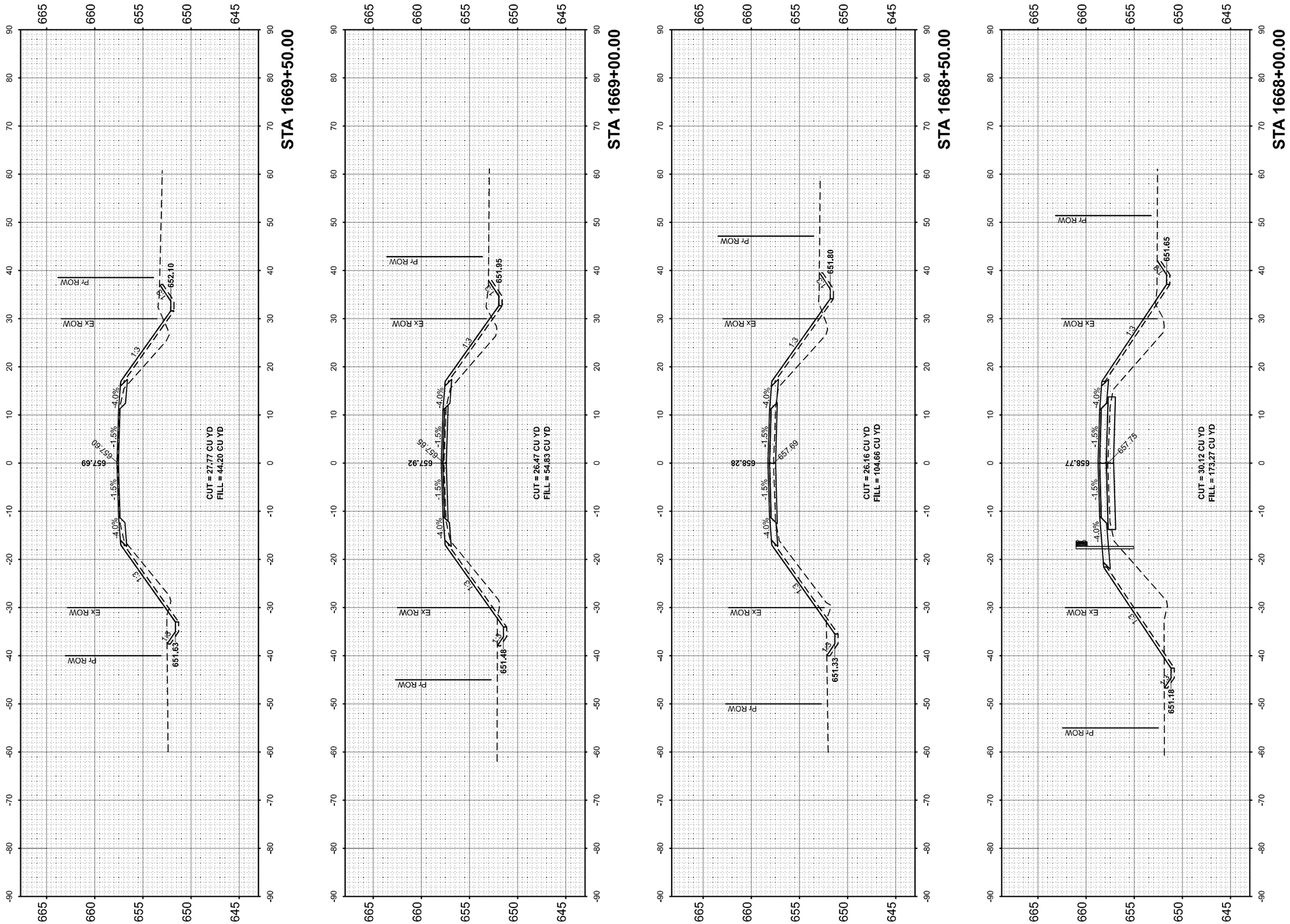

FINAL SURVEY		BY	DATE
NOTE BOOK	SURVEYED		
	PLOTTED		
	TEMPLATE		
	AREAS		
NO.	AREAS CHECKED		

ORIGINAL SURVEY		BY	DATE
NOTE BOOK	SURVEYED		
	PLOTTED		
	TEMPLATE		
	AREAS		
NO.	AREAS CHECKED		

MODEL: ExBL-IL115 - 1668+00.00 [Sheet]
FILE NAME: Z:\Shared\Projects\IDOT\IDOT-003-00\03_Design\02_CADD Sheets\WD66\D3668B58-sht-xssht.dgn

OSEH inc. 910 W. VAN BUREN STREET SUITE 620 CHICAGO, IL 60607 WWW.OSEHINC.COM

USER NAME = --	DESIGNED - AA	REVISED -
	DRAWN - AA	REVISED -
PLOT SCALE = 0.16666633 ' / in.	CHECKED - MM	REVISED -
PLOT DATE = 2/24/2025	DATE - 2/24/2025	REVISED -

STATE OF ILLINOIS
DEPARTMENT OF TRANSPORTATION

IL 115
CROSS SECTIONS

SCALE: | SHEET 5 OF 6 SHEETS | STA. 1668+00 TO STA. 1669+50

F.A.P. RTE.	SECTION	COUNTY	TOTAL SHEETS	SHEET NO.
796	(106BR-2)BR	FORD	55	54
		CONTRACT NO. 66B58		
		ILLINOIS	FED. AID PROJECT	

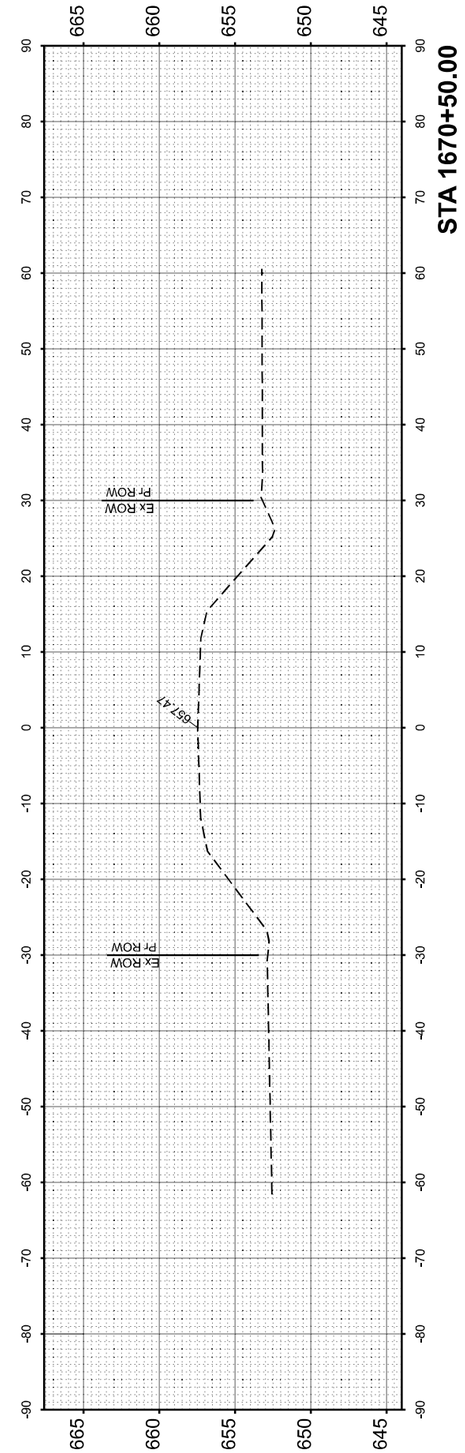

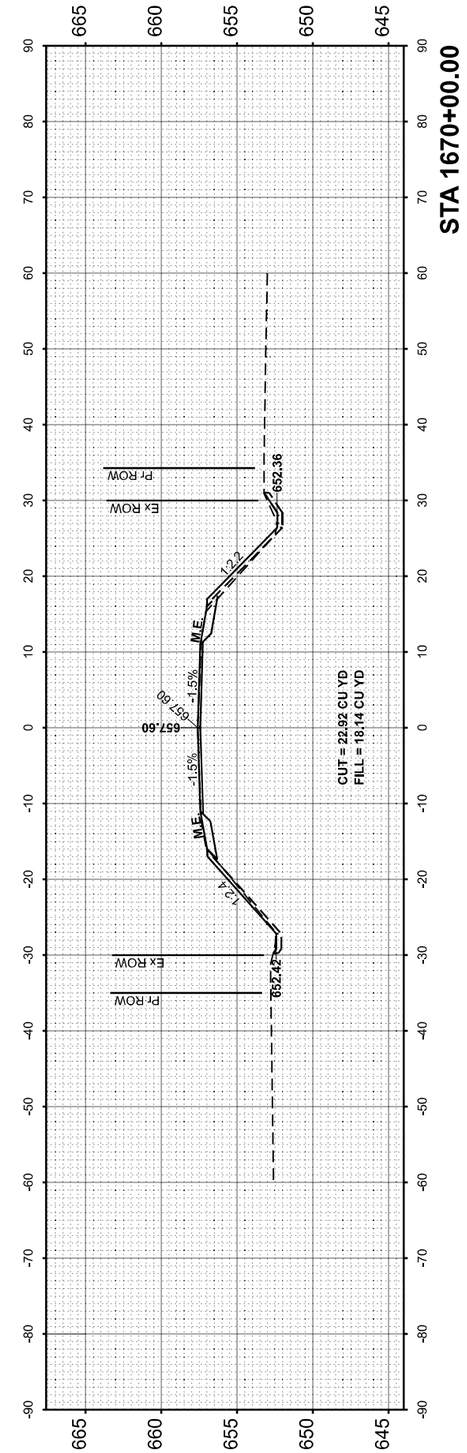

FINAL SURVEY		BY	DATE
NOTE BOOK	SURVEYED		
	PLOTTED		
	TEMPLATE		
	AREAS		
NO.	AREAS CHECKED		

ORIGINAL SURVEY		BY	DATE
NOTE BOOK	SURVEYED		
	PLOTTED		
	TEMPLATE		
	AREAS		
NO.	AREAS CHECKED		

MODEL: ExBL-IL115 - 1670+00.00 [Sheet]
FILE NAME: Z:\Shared\Projects\IDOT\IDOT-003-000003_Design\02_CADD Sheets\W246\D366B58xIH-xsshl.dgn

OSEH inc. 930 W. 35th BUTEN STREET SUITE 620 CHICAGO, IL 60607 WWW.OSEH-INC.COM

USER NAME = --	DESIGNED - AA	REVISED -	
	DRAWN - AA	REVISED -	
PLOT SCALE = 0.16666633 ' / in.	CHECKED - MM	REVISED -	
PLOT DATE = 2/24/2025	DATE - 2/24/2025	REVISED -	

STATE OF ILLINOIS
DEPARTMENT OF TRANSPORTATION

IL 115
CROSS SECTIONS

SCALE: | SHEET 6 OF 6 SHEETS | STA. 1670+00 TO STA. 1670+50

F.A.P. RTE.	SECTION	COUNTY	TOTAL SHEETS	SHEET NO.
796	(106BR-2)BR	FORD	55	55
		CONTRACT NO. 66B58		
	ILLINOIS	FED. AID PROJECT		