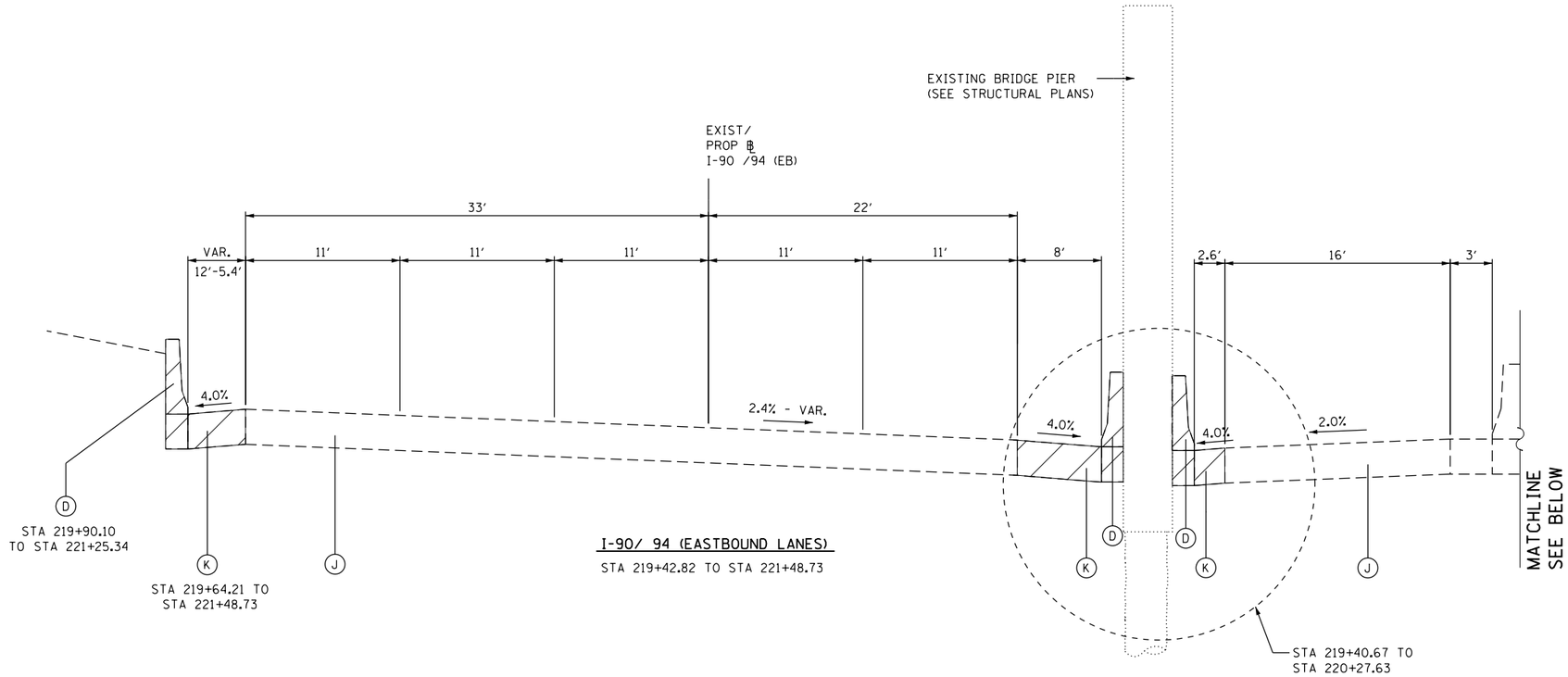

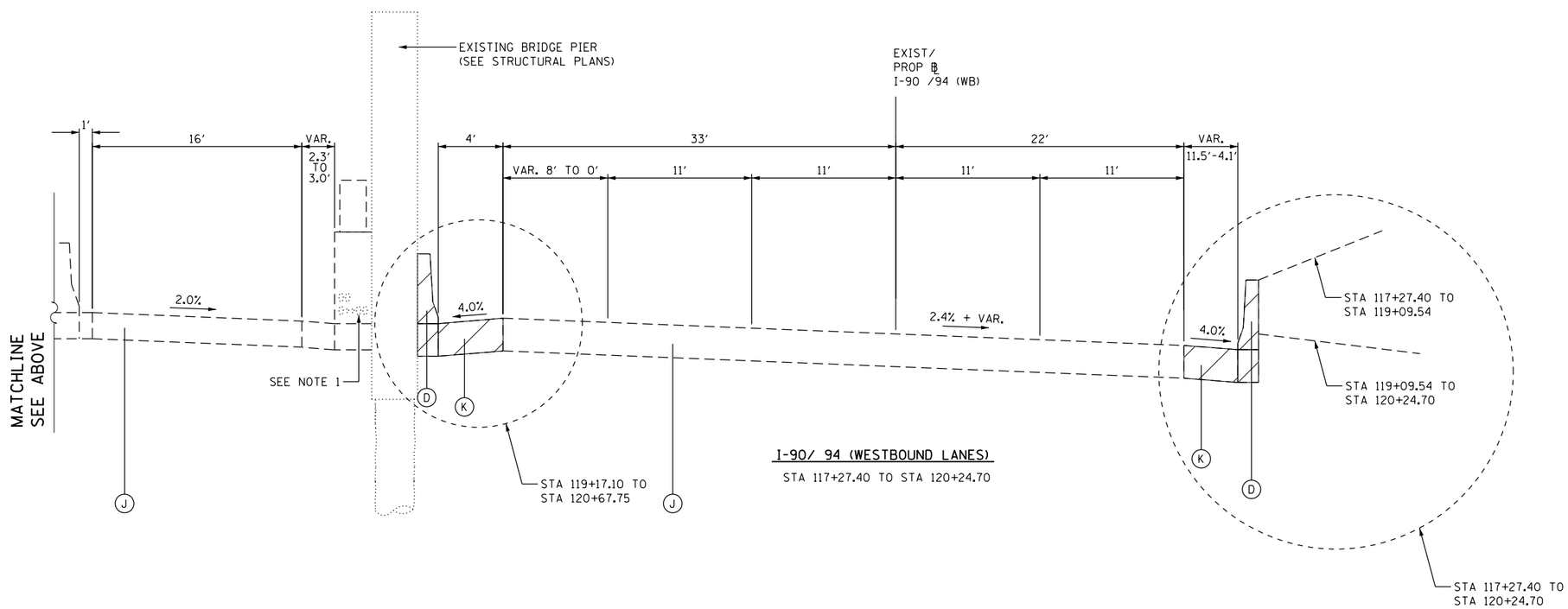

EXISTING LEGEND:

- (A) PCC PAVEMENT, 10″ & VAR.
- (B) PCC SHOULDER, 10″ & VAR.
- (C) NOT USED
- (D) CONCRETE BARRIER AND BASE
- (E) RETAINING WALL (CAST IN PLACE)
- (F) PROTECTIVE PCC SLAB, 5″
- (G) TOPSOIL, 6″
- (H) KNEE WALL AND FENCE
- (I) CURB AND GUTTER
- (J) CRC PAVEMENT, 12″ & VAR.
- (K) PCC SHOULDER, 12″ & VAR.
- (L) HMA SHOULDER, 8″ & VAR.
- (M) REMOVAL AND DISPOSAL OF UNSUITABLE MATERIAL

REMOVAL ITEMS

NOTES:

1. CONTRACTOR SHALL EXERCISE EXTREME CARE NOT TO IMPACT EXISTING REVLAC CONDUITS DURING EXCAVATION OPERATIONS.
2. EXISTING TOPSOIL SHALL BE STRIPPED FROM WITHIN PROPOSED CONSTRUCTION LIMITS. THE QUANTITY WAS BASED ON AN ASSUMED DEPTH OF 6″.

FILE NAME = \\collinsengr.com\1\data-1\Poseidon\DOCS\7000 - I94 at Ohio Street\CADD\CADD SHEETS\D160F63-sht-typ2.dgn

COLLINS ENGINEERS INC

USER NAME = rgall	DESIGNED -	REVISED -
PLOT SCALE = 10.0000 ′ / in.	DRAWN -	REVISED -
PLOT DATE = 3/25/2013	CHECKED -	REVISED -
	DATE -	REVISED -

STATE OF ILLINOIS
DEPARTMENT OF TRANSPORTATION

I-90/94 (KENNEDY EXPRESSWAY)
EXISTING TYPICAL SECTIONS

SCALE: | SHEET NO. OF SHEETS | STA. TO STA.

F.A.I. RTE.	SECTION	COUNTY	TOTAL SHEETS	SHEET NO.
90/94	0303-474HB-R	COOK	368	22
		CONTRACT NO. 60F63		

FED. ROAD DIST. NO. 1 | ILLINOIS | FED. AID PROJECT