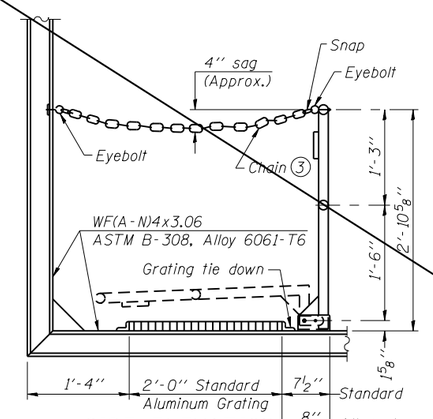

SIDE ELEVATION

(Showing Safety Chain W/O Sign)

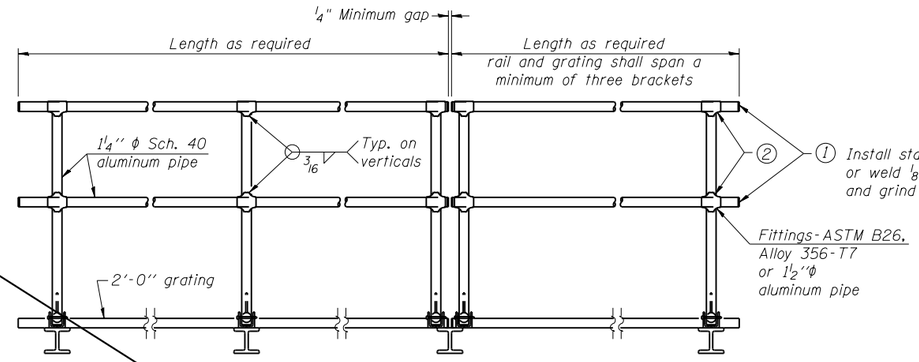

FRONT ELEVATION

② Horizontal handrail member shall be continuous thru fitting. Provide 7/16'' ϕ hole in fitting for 3/8'' ϕ bolt. Field drill 7/16'' ϕ hole in horizontal rail member. Provide locknut and two stainless steel washers for bolt. (Use 5/16'' eyebolts in 7/16'' ϕ holes on top rail at ends only.)

HANDRAIL DETAILS

Handrail pipe shall be ASTM B241 or B429, Alloy 6063-T6 or Alloy 6061-T6.

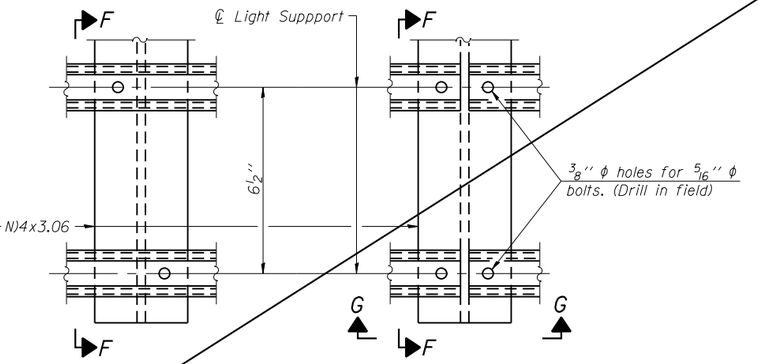

DETAIL F

DETAIL G

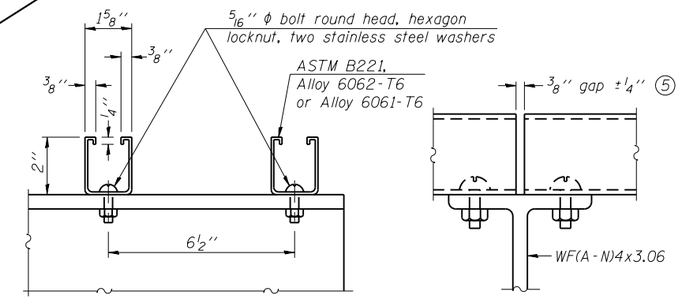

SECTION F-F

SECTION G-G

LIGHTING FIXTURE MOUNTS (IF REQUIRED)

⑤ Field cut ends of light support channels shall be free of burrs or hazardous projections and coated with zinc-rich primer or equivalent.

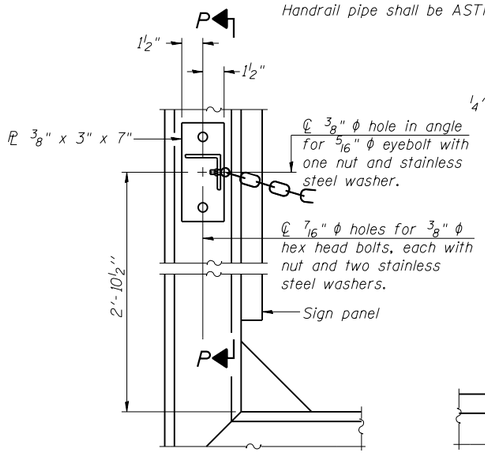

ALTERNATE SAFETY CHAIN ATTACHMENT

(With Sign Present)

Items not shown same as "Side Elevation" of "Handrail Details"

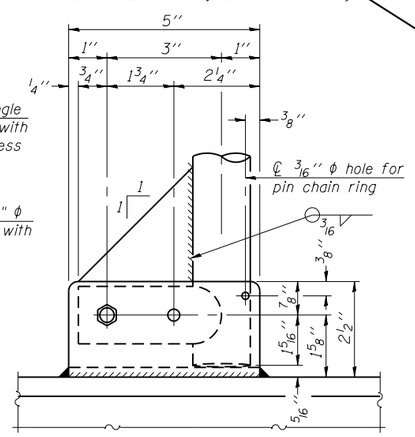

SIDE ELEVATION

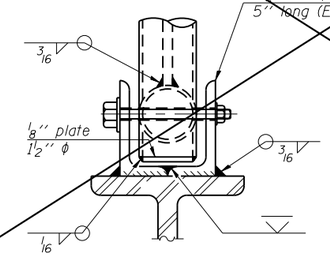

FRONT ELEVATION

Details not shown same as "ELEVATION" at right.

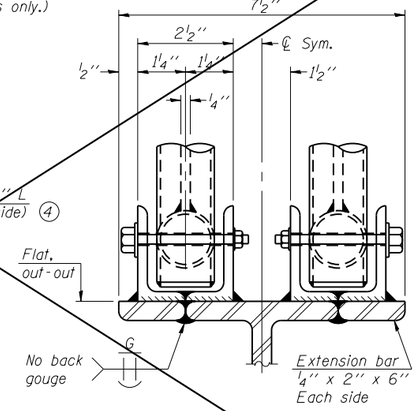

ELEVATION AT HANDRAIL JOINT ④

Details not shown same as "FRONT ELEVATION"

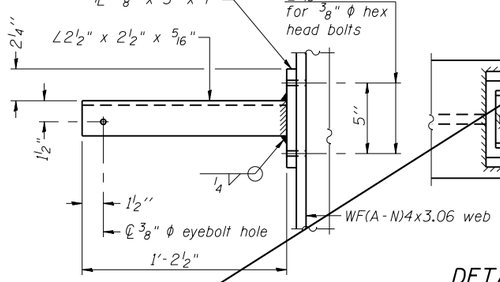

SECTION P-P

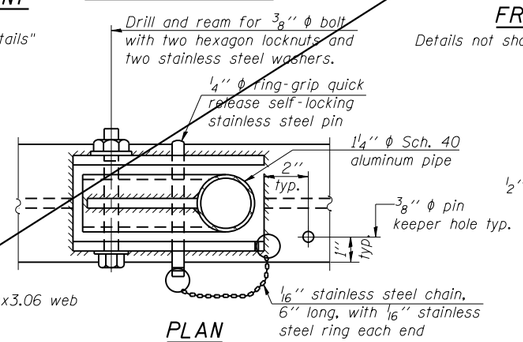

PLAN

DETAIL E HANDRAIL HINGE

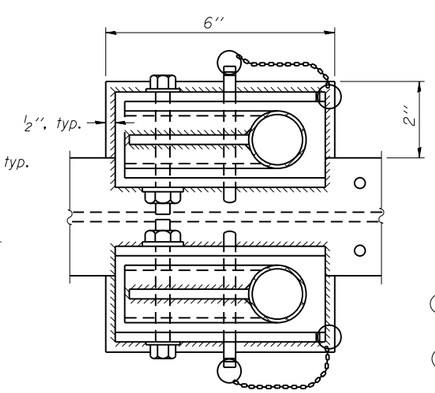

PLAN AT HANDRAIL JOINT

Details not shown same as "PLAN"

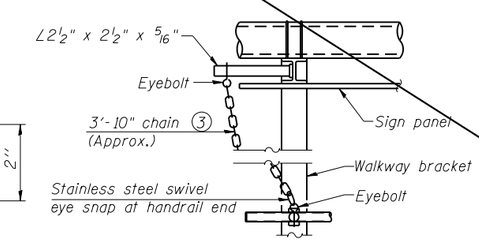

ALTERNATE SAFETY CHAIN ATTACHMENT

Details not shown similar to "Safety Chain" Details
(Walkway omitted for clarity)

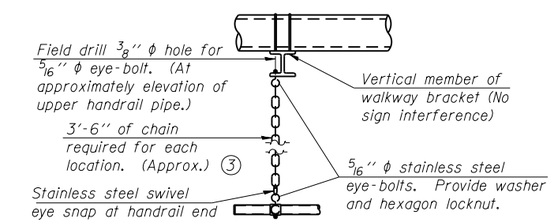

SAFETY CHAIN

One required for each end of each walkway.

③ 3/16'' Type 304L stainless steel chain, approximately 12 links per foot.

④ Extrusions may be used in lieu of the details shown, with approval of the Engineer.

OSC-A-8 6-1-12

FILE NAME = \\collinseng.com\il\data-il\Poseidon\DOCS\7000 - I94 at Ohio Street\CADD\CADD Structures\Sign Structures\alum.cantilever-sign.7000.dgn

COLLINS ENGINEERS INC

USER NAME = rgall	DESIGNED -	REVISED -
PLOT SCALE = 02.0000 '/ in.	DRAWN -	REVISED -
PLOT DATE = 3/25/2013	CHECKED -	REVISED -
	DATE -	REVISED -

STATE OF ILLINOIS
DEPARTMENT OF TRANSPORTATION

CANTILEVER SIGN STRUCTURES - HANDRAIL DETAILS
ALUMINUM TRUSS & STEEL POST

SCALE: SHEET NO. OF SHEETS STA. TO STA.

F.A.I. RTE.	SECTION	COUNTY	TOTAL SHEETS	SHEET NO.
90/94	0303-474HB-R	COOK	368	156
		CONTRACT NO. 60F63		

FED. ROAD DIST. NO. 1 ILLINOIS FED. AID PROJECT