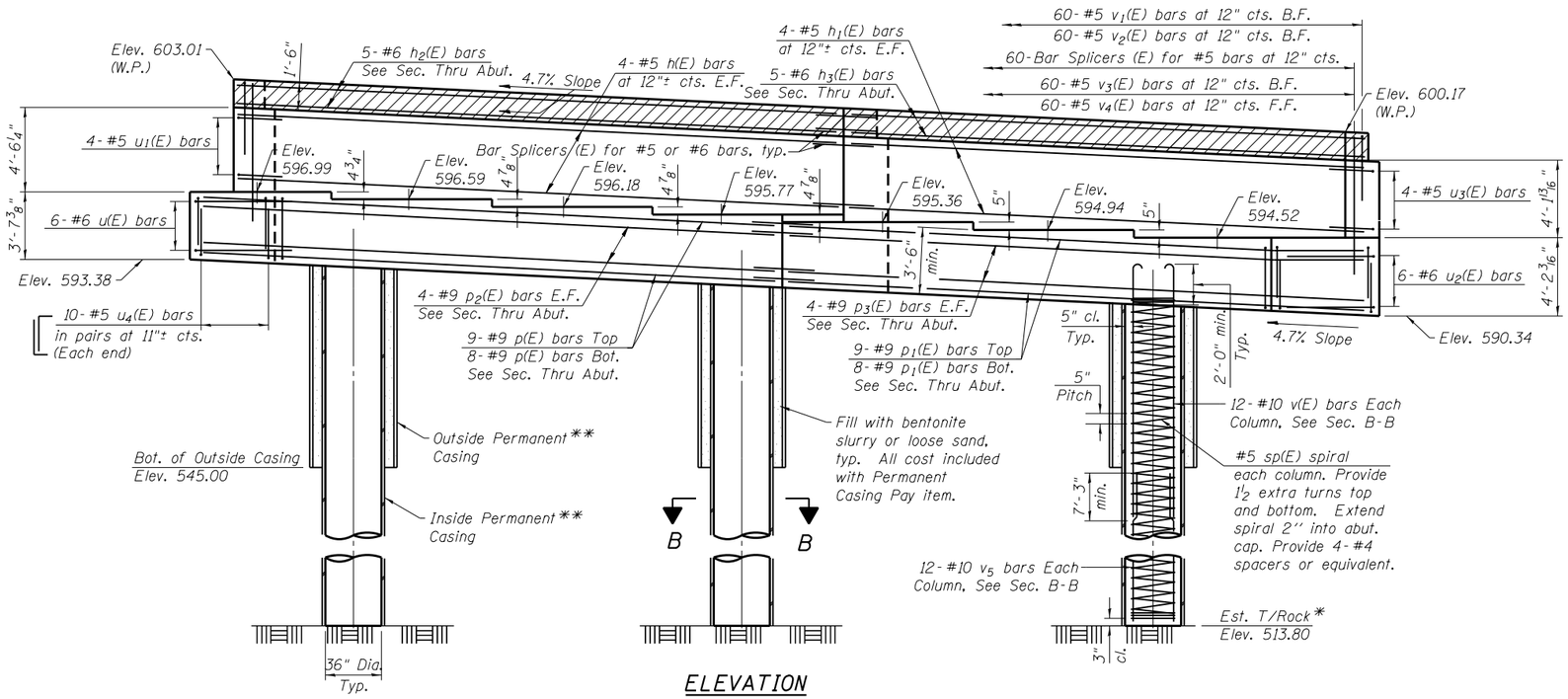

ELEVATION

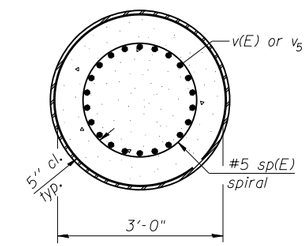

SECTION B-B

* The quantities and detailing are based on the estimated elevations shown on the plans. The actual elevations may differ at each shaft and corresponding adjustments shall be made to the drilled shaft and reinforcment quantities and payment limits.

** The casing thickness shall be 1/2", typ. See Article 516.06(d) of the Standard Specifications. Pay limits for permanent casing are based on the minimum length shown.

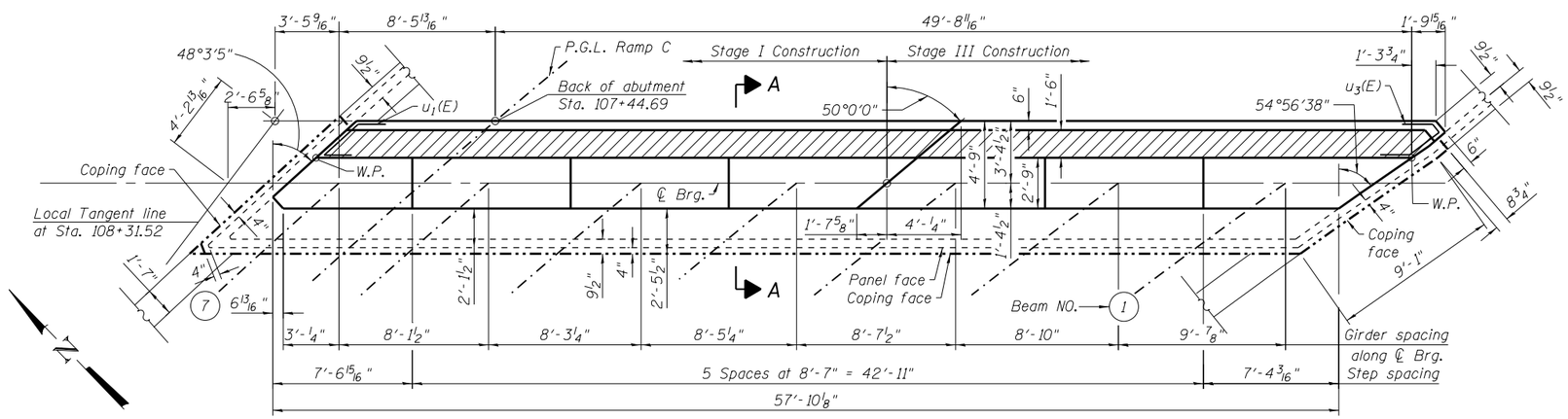

TOP VIEW

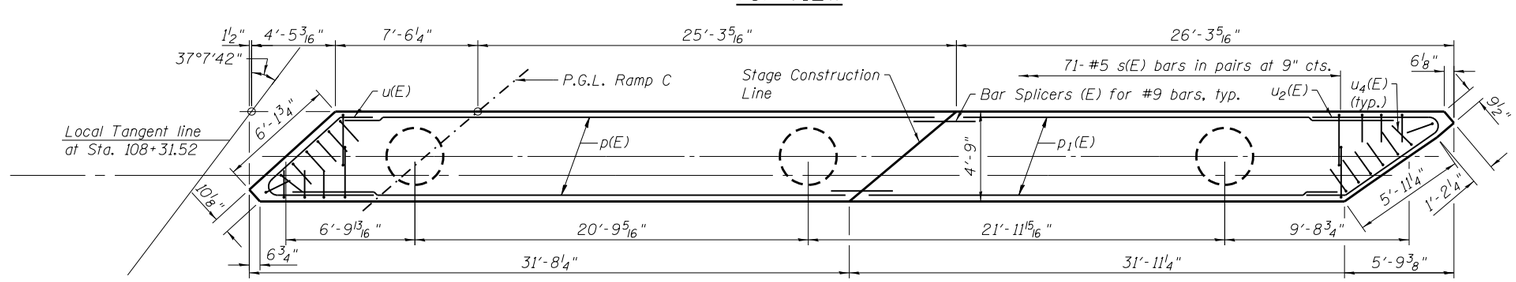

PLAN-PILE CAP

MINIMUM BAR LAP

(Abutment)

(E) bars	Other bars
#5 bar = 3'-3"	#10 bar = 7'-3"
#6 bar = 3'-10"	
#7 bar = 5'-2"	
#8 bar = 6'-9"	

Min. Lap for Spirals = 2'-6"

Notes:

For Anchor Bolt and Bearing Plate locations, see sheets S29 thru S31 of S49.

For Section A-A and Section Thru Abutment, see sheet S34 of S49.

See sheet S43 of S49 for Bar Splicer Details.

Concrete sealer to be applied to front face, ends, and bearing seats of abutment cap and front face of backwall.

COLLINS ENGINEERS
123 N. Wacker Dr. Suite 900 Chicago, Il. 60606
Tele. (312) 704-9300 Fax (312) 704-9320
www.collinsengr.com
ILLINOIS PROFESSIONAL DESIGN FIRM LICENSE NO.184-000893

USER NAME =	DESIGNED - MAH	REVISED	
	CHECKED - LDB	REVISED	
PLOT SCALE =	DRAWN - DR	REVISED	
PLOT DATE =	CHECKED - JMH	REVISED	

STATE OF ILLINOIS
DEPARTMENT OF TRANSPORTATION

EAST ABUTMENT
STRUCTURE NO. 016-1322

SHEET NO. S32 OF S49 SHEETS

F.A.P. RTE.	SECTION	COUNTY	TOTAL SHEETS	SHEET NO.
0383	0303-474HB-R	COOK	368	224
		CONTRACT NO. 60F63		
		ILLINOIS FED. AID PROJECT		