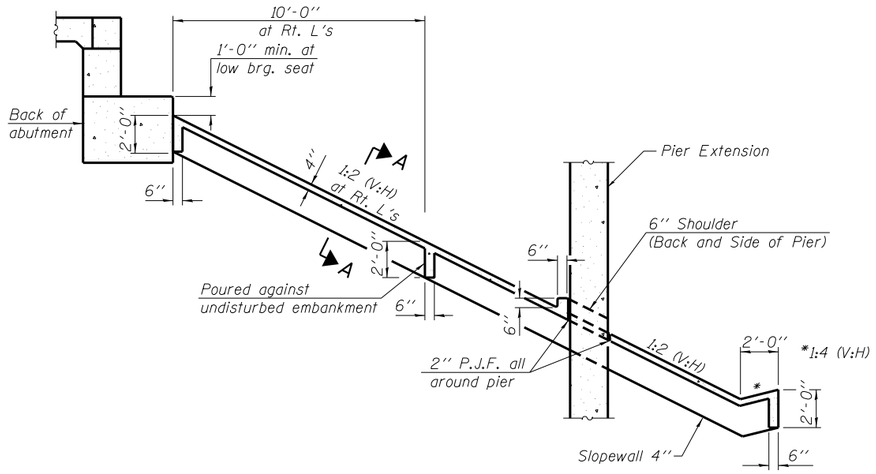

SECTION THRU
CONCRETE SLOPEWALL

Note: Slopewall shall be reinforced with welded wire fabric, 6in. x 6 in. - W4.0 x W4.0, weighting 58 lbs. per 100 sq. ft.

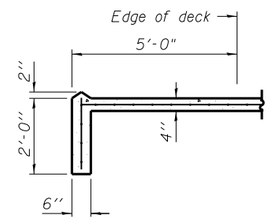

SECTION A-A

BILL OF MATERIAL

Item	Unit	Total
Slope Wall Removal	Sq. Yd.	1831
Slope Wall 4 Inch	Sq. Yd.	1691

T:\Project Archive\08-228-1001-157 Bridges- PTB 153-37\Drawings\CADD Drawings\Structural\Final Plans\SHS\copied from chicago server for plotting 4-23-2013\0266942-004-slopewall details.dgn

TERRA ENGINEERING LTD.	USER NAME =	DESIGNED - EA	REVISED	STATE OF ILLINOIS DEPARTMENT OF TRANSPORTATION	SLOPEWALL DETAILS STRUCTURE NOS. 038 – 0013 & 0014
		CHECKED - OY	REVISED		
	PLOT SCALE =	DRAWN - CM	REVISED		
	PLOT DATE =	CHECKED - JB	REVISED		SHEET NO. S04 OF S71 SHEETS

F.A.I. RTE.	SECTION	COUNTY	TOTAL SHEETS	SHEET NO.
57	38-2HVB, HVBR-1	IROQUOIS	146	43
		CONTRACT NO. 66942		
	ILLINOIS	FED. AID PROJECT		