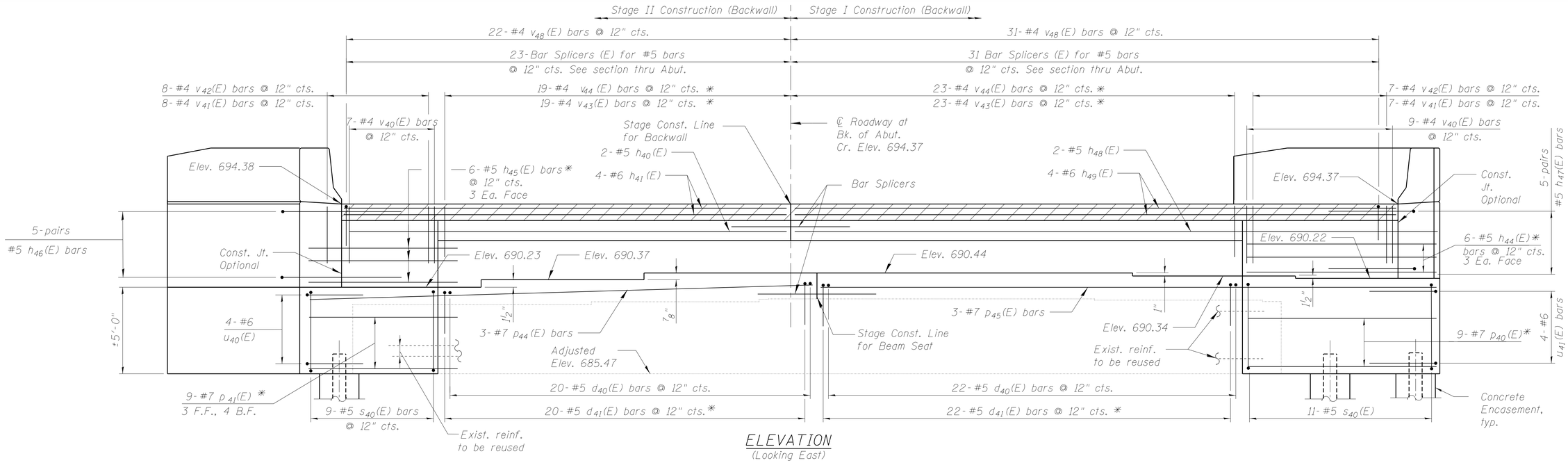

ELEVATION
(Looking East)

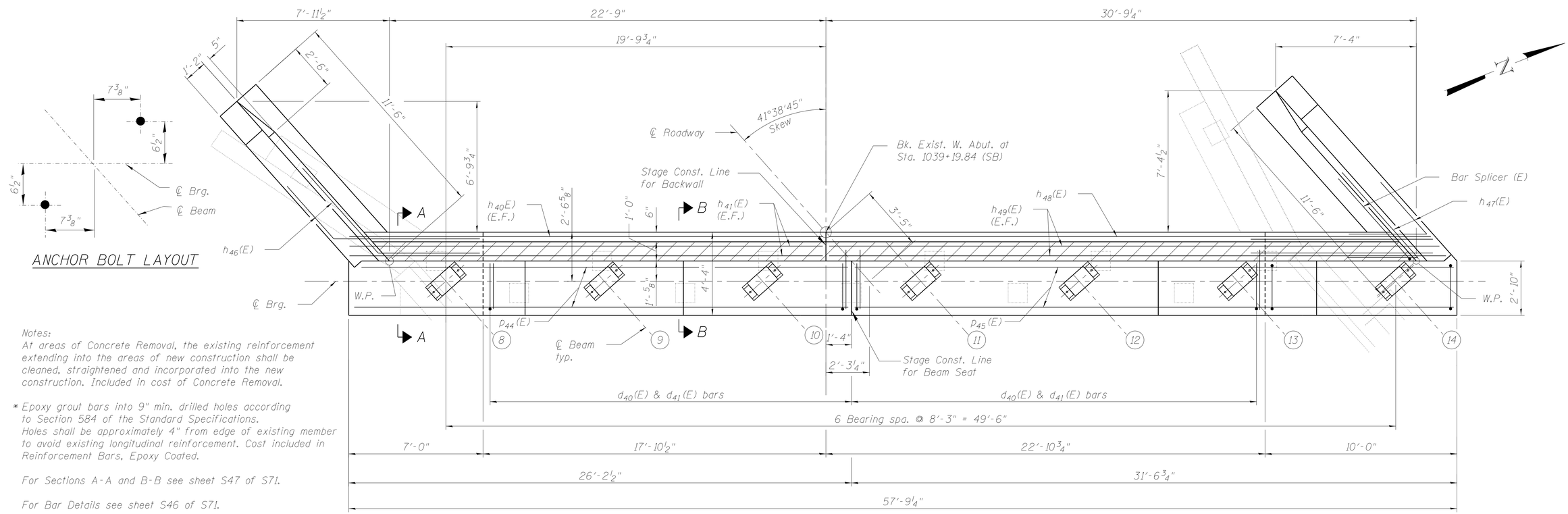

ANCHOR BOLT LAYOUT

TOP VIEW
West Abutment (SB)

Notes:
At areas of Concrete Removal, the existing reinforcement extending into the areas of new construction shall be cleaned, straightened and incorporated into the new construction. Included in cost of Concrete Removal.

* Epoxy grout bars into 9" min. drilled holes according to Section 584 of the Standard Specifications. Holes shall be approximately 4" from edge of existing member to avoid existing longitudinal reinforcement. Cost included in Reinforcement Bars, Epoxy Coated.

For Sections A-A and B-B see sheet S47 of S71.

For Bar Details see sheet S46 of S71.

Concrete Sealer to be applied to new concrete surfaces of abutment, beam seats and backwalls.

M:\1 57 OVER CNRR & OLD 45\Drawings\CADD Drawings\Structural\Final Plans\SHTS\D36942-045-W-Abutment-SB.dgn

TERRA ENGINEERING LTD.	USER NAME =	DESIGNED - EA	REVISED	STATE OF ILLINOIS DEPARTMENT OF TRANSPORTATION	WEST ABUTMENT – SOUTHBOUND SHEET 1 STRUCTURE NOS. 038 – 0013 & 0014	F.A.I. RTE.	SECTION	COUNTY	TOTAL SHEETS	SHEET NO.
		CHECKED - OY	REVISED			57	38-2HVB, HVBR-1	IROQUOIS	146	84
	PLOT SCALE =	DRAWN - CM	REVISED					CONTRACT NO. 66942		
	PLOT DATE =	CHECKED - JB	REVISED		SHEET NO. S45 OF S71 SHEETS			ILLINOIS FED. AID PROJECT		