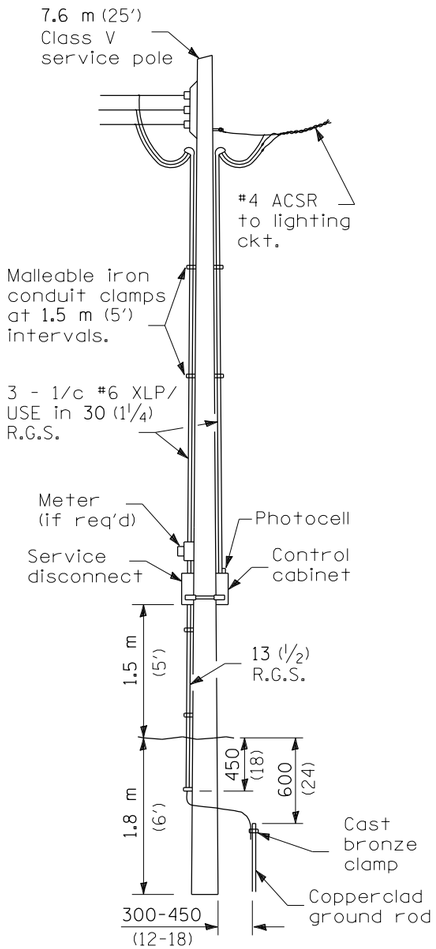

SERVICE INSTALLATION

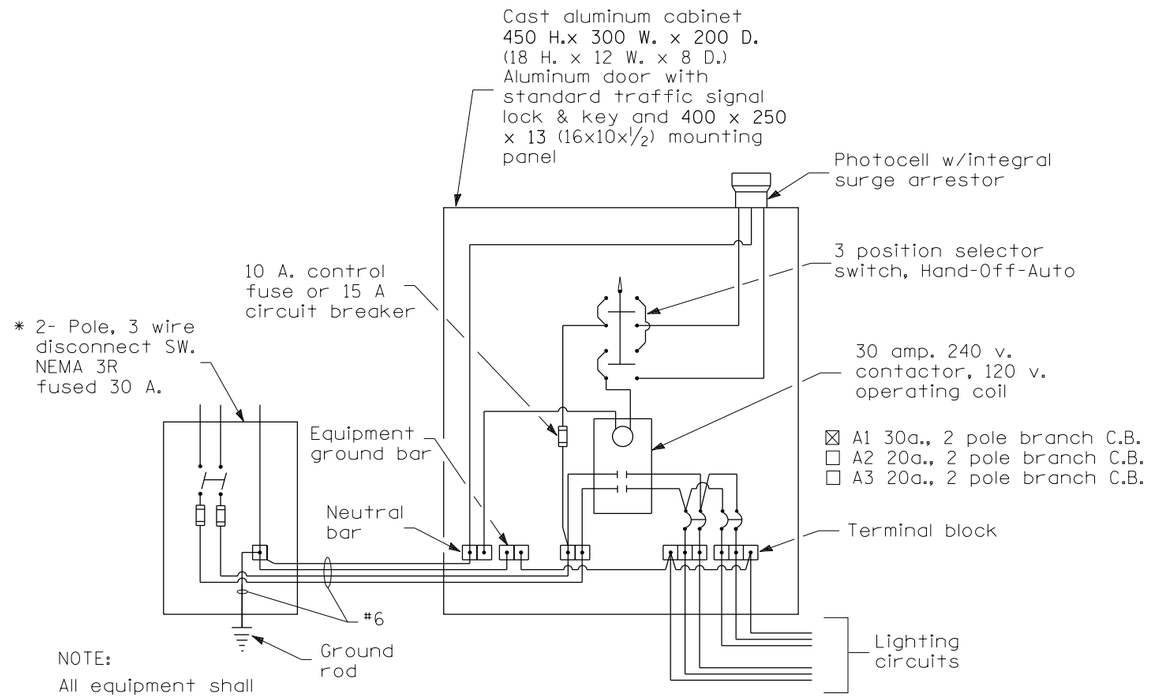

NOTE:

All equipment shall be U.L. approved.

* 30 A. or 60 A., dependent upon utility co. rules.

WIRING DIAGRAM

POLE LENGTH	DEPTH IN GROUND
19.8 m (65')	3.6 m (12')
18.0 m (60')	3.0 m (10')
16.8 m (55')	2.7 m (9')
16.0 m (50')	2.4 m (8')
13.7 m (45')	2.1 m (7')
12.0 m (40')	2.0 m (6.5')
10.7 m (35')	1.8 m (6')
9.0 m (30')	1.7 m (5.5')

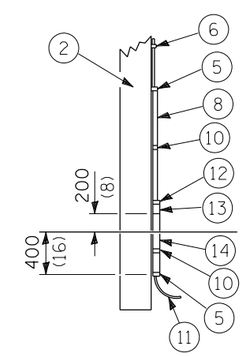

POLE, WOOD

NOTE:

Luminaire(s) shall have a 2-pole inline weatherproof quick disconnect fuse holder.

Luminaire(s) shall be oriented and the mounting angle adjusted as recommended by the Engineer.

Connect luminaire equipment ground to ACSR messenger.

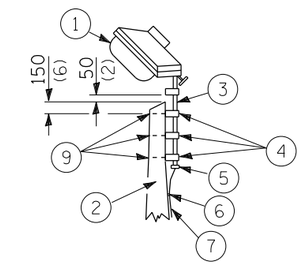

1. Luminaire 250w HPS
2. Wood pole, class 3 or better
3. 63 (2 1/2) Galv. steel conduit
4. Single offset pole band
5. Conduit bushing
6. Cable clamps on 600 (24) centers
7. 2/c #10 Type USE cable
8. 25 (1) Galv. steel conduit 3.0 m (10') in length
9. 16 (5/8) Ø hot dipped galvanized bolt with flat washer & locknut (3 req'd)
10. Conduit clamps on 900 (36) centers
11. Electric cable assembly in trench or existing unit duct, as applicable
12. Threaded reducer
13. "C" Condulet, threaded
14. 40 (1 1/2) Galv. steel conduit for 1 unit duct or 75 (3) galv. steel conduit for 2 or 3 unit ducts.

All dimensions are in millimeters (inches) unless otherwise shown.

FILE NAME = D468671-sht-temp lighting-02.dgn	USER NAME = WAH	DESIGNED - IDOT	REVISED -
		DRAWN -	REVISED -
	PLOT SCALE = 100.000 ' / in.	CHECKED -	REVISED -
Default	PLOT DATE = 12/13/2012	DATE -	REVISED -

STATE OF ILLINOIS
DEPARTMENT OF TRANSPORTATION

TEMPORARY LIGHTING DETAIL

SCALE: NTS | SHEET 2 OF 3 SHEETS | STA. TO STA.

F.A.P. RTE.	SECTION	COUNTY	TOTAL SHEETS	SHEET NO.
673	(102B-1)BR	TAZEWELL	89	28

CONTRACT NO. 68671

ILLINOIS FED. AID PROJECT