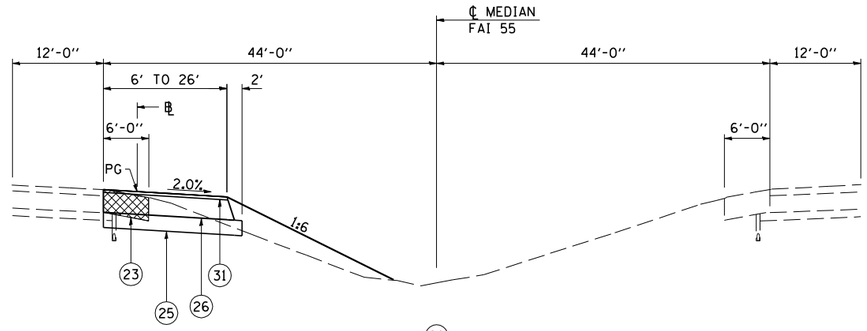

29

FAI ROUTE 55
PRE-STAGE 1 TYPICAL CROSS SECTIONS
SN 054-0065, 0066, 0067, 0068
28 STA 484+52.18 TO STA 487+61.92

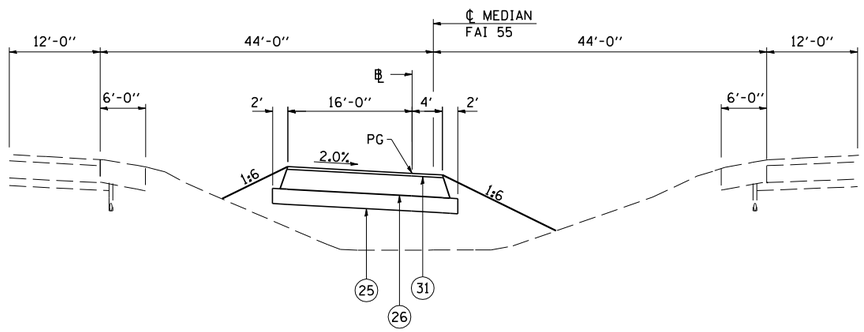

28

FAI ROUTE 55
PRE-STAGE 1 TYPICAL CROSS SECTIONS
SN 054-0065, 0066, 0067, 0068
27 STA 482+88.50 TO STA 484+52.78 29

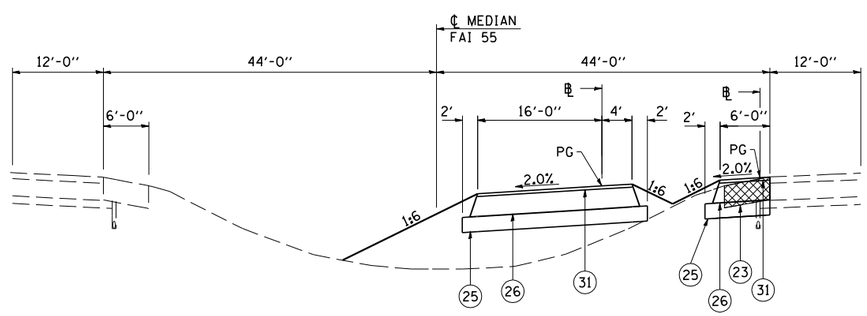

TRANSITION FROM -2.0% AT STA 482+08.80
TO 2.0% AT STA 482+59.94

27

FAI ROUTE 55
PRE-STAGE 1 TYPICAL CROSS SECTIONS
SN 054-0065, 0066, 0067, 0068
26 STA 482+08.12 TO STA 484+88.40 28

	LEGEND
1	EX STABILIZED SUBBASE 4"
2	EX CONTINUOUSLY REINFORCED PORTLAND CEMENT CONCRETE PAVEMENT 9"
3	EX PORTLAND CEMENT CONCRETE PAVEMENT 8"
4	EX PORTLAND CEMENT CONCRETE PAVEMENT 10"
5	EX HOT-MIX ASPHALT RESURFACING 1 1/2"
6	EX HOT-MIX ASPHALT RESURFACING 3 1/4"
7	EX HOT-MIX ASPHALT RESURFACING 4 3/4"
8	EX HOT-MIX ASPHALT SHOULDERS 12"
9	EX HOT-MIX ASPHALT SHOULDERS 12 1/4"
10	EX HOT-MIX ASPHALT SHOULDERS 13 3/4"
11	EX AGGREGATE SHOULDERS
12	EX CONCRETE MEDIAN SURFACE 4"
13	EX COMBINATION CONCRETE CURB AND GUTTER TYPE M-6.06
14	EX PIPE UNDERDRAINS
15	EX STEEL PLATE BEAM GUARDRAIL
16	EX COMBINATION CONCRETE CURB AND GUTTER TYPE B-6.24
21	PR PAVEMENT REMOVAL
22	PR MEDIAN REMOVAL
23	PR PAVED SHOULDER REMOVAL
24	PR HOT-MIX ASPHALT SURFACE REMOVAL, VARIABLE DEPTH
25	PR SUBBASE GRANULAR MATERIAL, TYPE A 8"
26	PR HOT-MIX ASPHALT BASE COURSE, 10 1/2"
27	PR HOT-MIX ASPHALT BASE COURSE, 10 3/4"
28	PR HOT-MIX ASPHALT BASE COURSE, 12 1/4"
29	PR HOT-MIX ASPHALT BASE COURSE, 14 1/2"
30	PR LEVELING BINDER (MACHINE METHOD), N90 1 3/4"
31	PR HOT-MIX ASPHALT SURFACE COURSE, MIX "D", N90 1 1/2"
32	PR COMBINATION CONCRETE CURB AND GUTTER TYPE B-6.24
33	PR HOT-MIX ASPHALT SHOULDERS 1 1/2"
34	PR AGGREGATE WEDGE SHOULDERS, TYPE B
35	PR HOT-MIX ASPHALT SHOULDERS 12 1/4"
37	PR REMOVE AND ERECT STEEL PLATE BEAM GUARDRAIL
38	PR SUBBASE GRANULAR MATERIAL, TYPE A 12"
39	PR CONTINUOUSLY REINFORCED CONCRETE PAVEMENT 9"
43	PR STEEL PLATE BEAM GUARDRAIL TYPE A 6' POSTS
44	APPROACH SLAB REMOVAL
45	PR STEEL PLATE BEAM GUARDRAIL TYPE A 9' POSTS