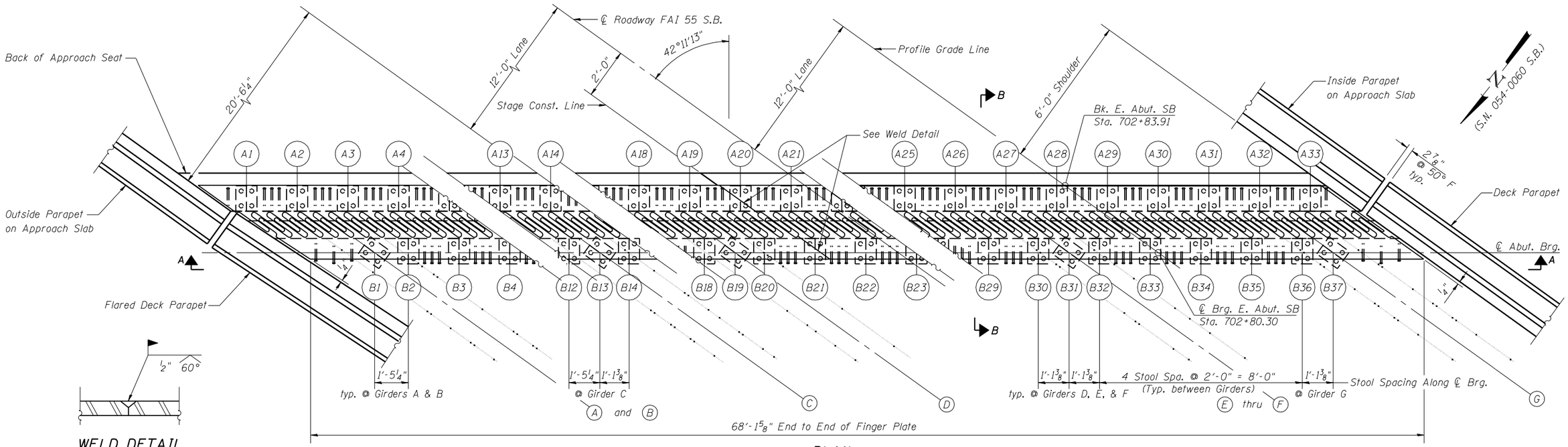

WELD DETAIL
(Required at Stage Construction Joint)

PLAN

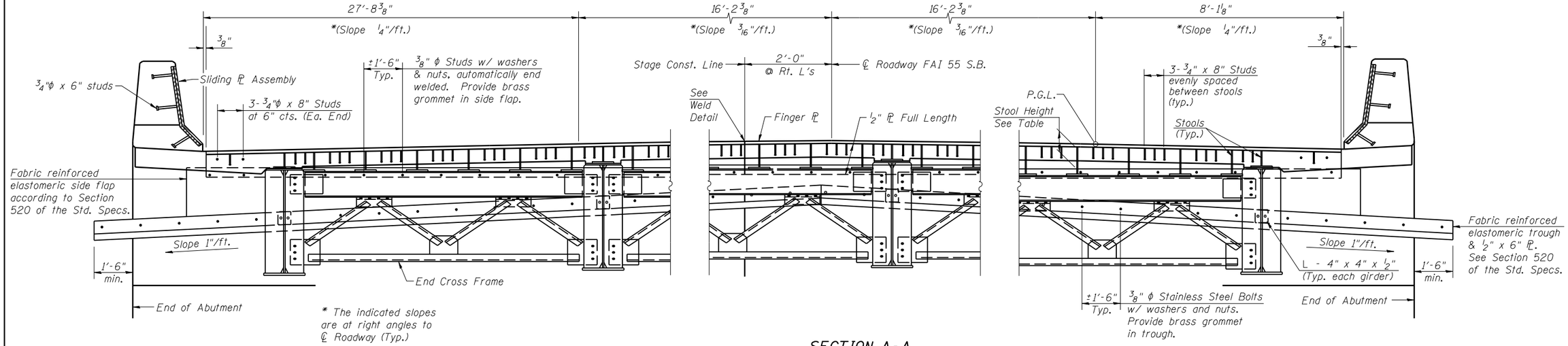

SECTION A-A
(Finger Plate Joint at E. Abut. S.B. - Looking East)

TABLE OF STOOL HEIGHTS

Approach E. Abut. SB	A1	A2	A3	A4	A5	A6	A7	A8	A9	A10	A11	A12	A13	A14	A15	A16	A17	A18	A19	A20	A21	A22	A23	A24	A25	A26	A27	A28	A29	A30	A31	A32	A33				
Stool Height (in.)	10½	11⅛	11⅞	15⅝	13¼	14	14⅜	15¾	15¼	15⅝	16	16⅞	17¾	18⅝	19½	20⅜	20¾	21¼	21¾	22¼	22¾	22¾	22⅝	22⅝	22⅝	22⅝	22½	22½	22⅜	22¼	22¼	22⅛	22				
Deck E. Abut. SB	B1	B2	B3	B4	B5	B6	B7	B8	B9	B10	B11	B12	B13	B14	B15	B16	B17	B18	B19	B20	B21	B22	B23	B24	B25	B26	B27	B28	B29	B30	B31	B32	B33	B34	B35	B36	B37
Stool Height (in.)	7⅛	11⅜	12	12⅝	13⅛	13⅝	7⅛	11½	12⅛	12¾	13¼	13⅞	7⅜	11⅛	11¾	12⅜	13	13½	7¼	11⅜	11¾	12¼	12¾	13⅛	7½	11⅜	11¼	11¼	11¼	11⅛	7¾	10½	10½	10⅜	10⅜	10¼	7¼

CEC Cummins Engineering Corporation — Civil and Structural Engineering	JOB = 2265.2	DESIGNED - AAN	REVISED -	STATE OF ILLINOIS DEPARTMENT OF TRANSPORTATION	FINGER PLATE EXPANSION JOINT STRUCTURE NO. 054-0060 (SB)	F.A.I. RTE. 55	SECTION D6 LOGAN CO BR 2011-1	COUNTY LOGAN	TOTAL SHEETS 429 / SHEET NO. 260
	FILE = 0540060.0061-72E11-30-31-FingerPlatejoint.dgn	CHECKED - MDC	REVISED -						
	DATE = 12/12/2012	DRAWN - TSH	REVISED -					CONTRACT NO. 72E11	
		CHECKED - MDC	REVISED -		SHEET NO. 30 OF 53 SHEETS		ILLINOIS FED. AID PROJECT		