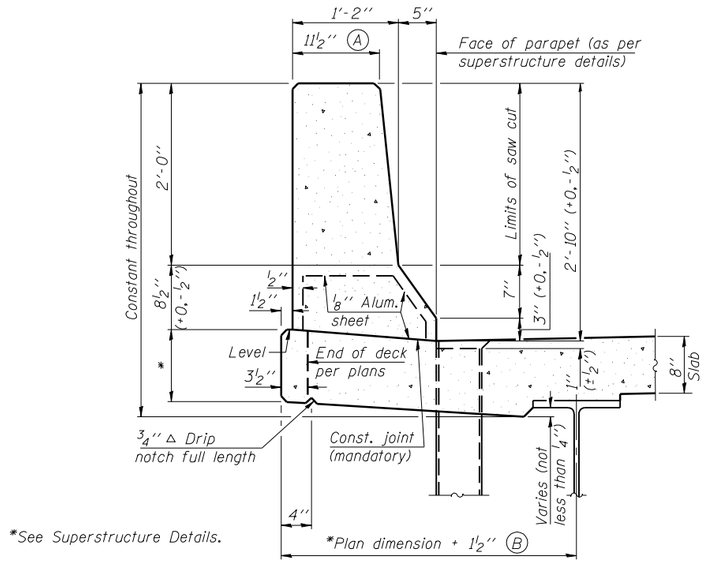

34" F SHAPE PARAPET SECTION

(Showing dimensions)

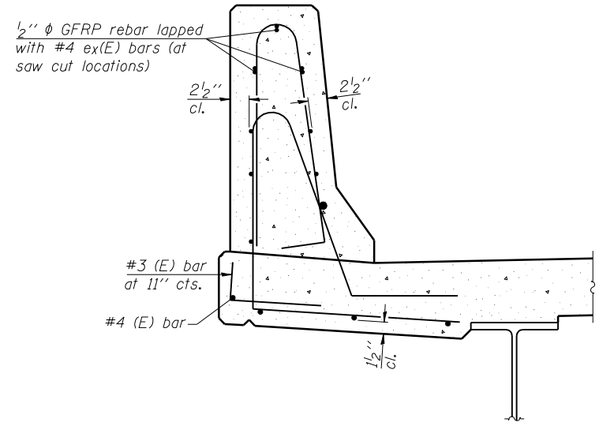

SECTION

(34" parapet shown - 42" parapet similar)
(Showing reinforcement clearances for slip forming and additional reinforcement bars)

GENERAL NOTES

All dimensions shall remain the same as shown on superstructure details, except dimensions A and B which are to be revised as shown to provide additional clearance. Additional concrete needed to revise dimension A and B = 0.0165 cu. yds./ft. for 34" parapet or = 0.0223 cu. yds./ft. for 42" parapet.

Place aluminum sheet in curb portion at and near piers. Full thickness saw cut at all joint locations in lieu of cork joint filler.

Steel superstructure shown. Other superstructure types similar.

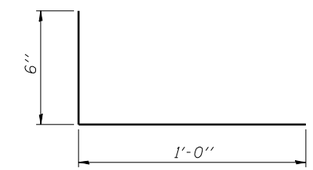

#3 (E) BAR

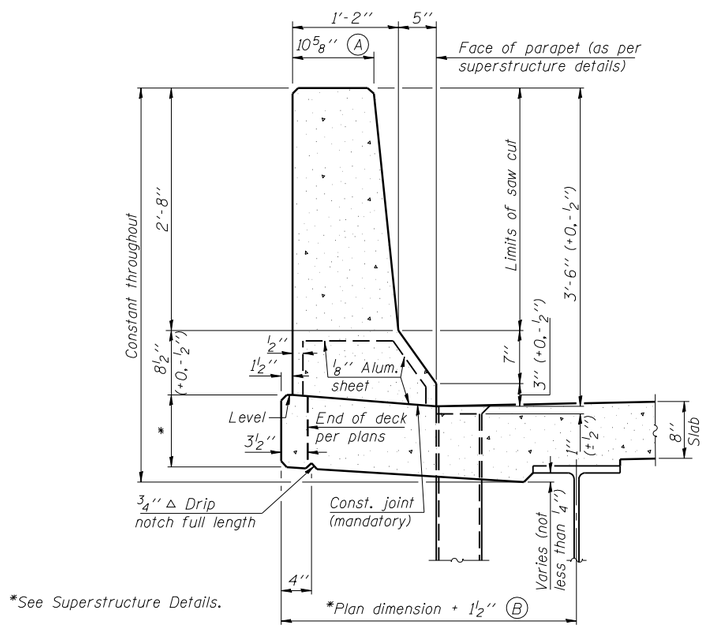

42" F SHAPE PARAPET SECTION

(Showing dimensions)

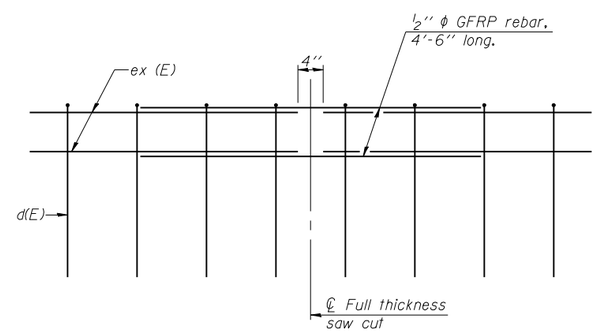

GFRP REBAR STIFFENING DETAIL

(Place as shown in parapet section at each parapet joint location.)

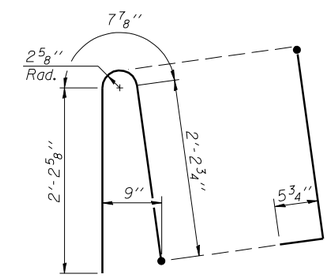

ALTERNATE BAR d(E)

(For 34" parapet when conduit is present)

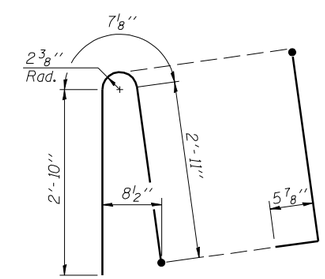

ALTERNATE BAR d(E)

(For 42" parapet when conduit is present)

SFP 34-42 8-16-12

CEC Cummins Engineering Corporation — Civil and Structural Engineering	JOB = 2265.2	DESIGNED - AAN	REVISED -	STATE OF ILLINOIS DEPARTMENT OF TRANSPORTATION	CONCRETE PARAPET SLIPFORMING OPTION STRUCTURE NO. 054-0060 (SB) & STRUCTURE NO. 054-0061 (NB)	F.A.I. RTE.	SECTION	COUNTY	TOTAL SHEETS / SHEET NO.
	FILE = 0540060.0061-72E11-53-ParaSlipOption.dgn	CHECKED - MDC	REVISED -			55	D6 LOGAN CO BR 2011-1	LOGAN	429 / 283
	DATE = 3/18/2013	DRAWN - SJS	REVISED -					CONTRACT NO. 72E11	
		CHECKED - MDC	REVISED -		SHEET NO. 53 OF 53 SHEETS		ILLINOIS	FED. AID PROJECT	