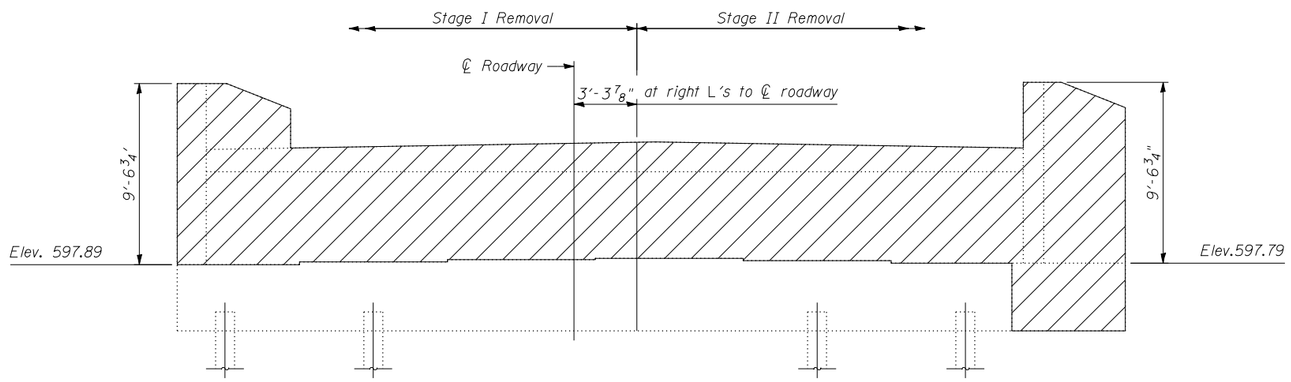

ELEVATION
(Looking South)

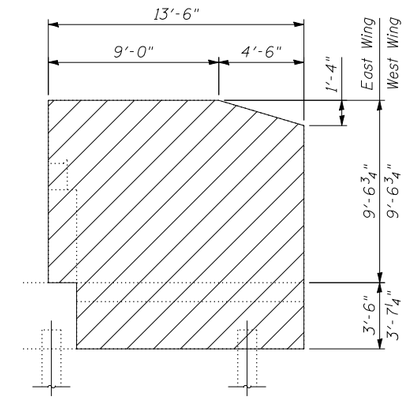

OUTSIDE ELEVATION OF WINGWALL

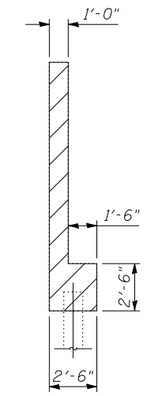

SECTION B-B

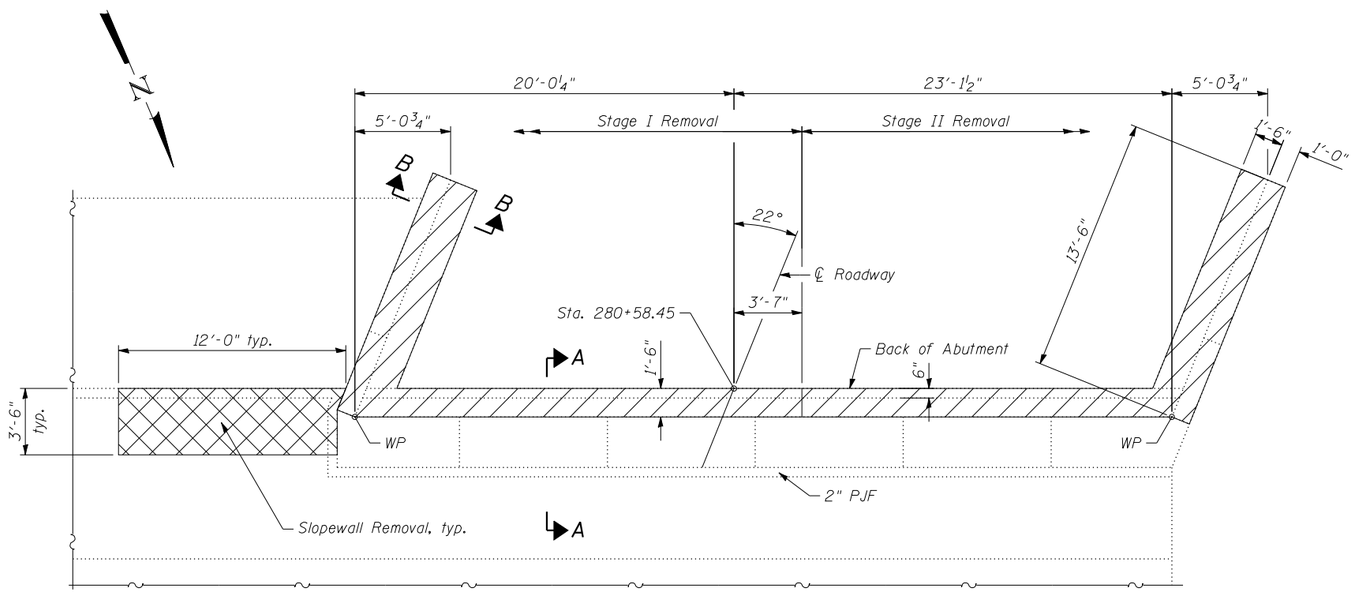

PLAN

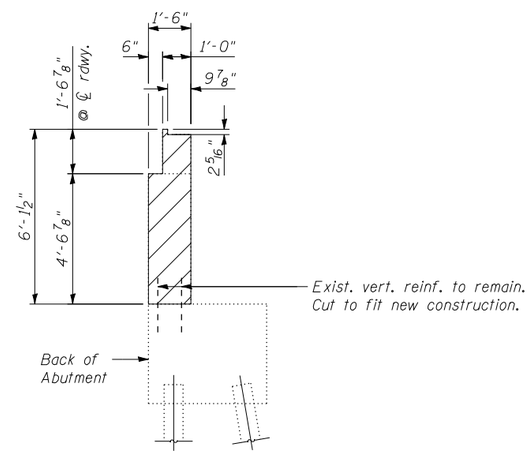

SECTION A-A

BILL OF MATERIAL

ITEM	UNIT	TOTAL
Concrete Removal	Cu. Yd.	29

Notes:
Existing reinforcement shall be cleaned and incorporated into the new construction. Cost included with Concrete Removal.
Hatched areas indicates Concrete Removal.
Cross hatched areas indicate Slopewall Removal.
See sheet 34 of 38 for quantity.
Existing reinforcement not extending into the areas of new construction shall be cut at the removal line and removed. Exposed portion shall be cleaned and coated with a layer of epoxy. Cost included with Concrete Removal.

Coombe-Bloxdorf P.C.
-CIVIL ENGINEERS-
-STRUCTURAL ENGINEERS-
-LAND SURVEYORS-
Design Firm License No. 184-002703

FILE NAME = ...\0540063-0064-72e11-026-s-abut-sb-removal.dgn	USER NAME = _MML_	DESIGNED - RKM	REVISED -
		CHECKED - MCB	REVISED -
	PLOT SCALE = 8:0.000000 ':' / IN.	DRAWN - CFC	REVISED -
CB PROJECT NO 10007-3	PLOT DATE = 3/18/2013	CHECKED - RKM	REVISED -

STATE OF ILLINOIS
DEPARTMENT OF TRANSPORTATION

SOUTH ABUTMENT CONCRETE REMOVAL (SOUTH BOUND STRUCTURE)
STRUCTURE NO. 054-0063 (N.B.) & 054-0064 (S.B.)

SHEET NO. 26 OF 38 SHEETS

F.A.I. RTE.	SECTION	COUNTY	TOTAL SHEETS	SHEET NO.
55	D6 LOGAN CO BR 2011-1	LOGAN	429	311
		CONTRACT NO. 72E11		
		ILLINOIS FED. AID PROJECT		