PRE-STAGE TYPICAL CROSS SECTIONS

SOUTHBOUND LANE ONLY
STA. 3308+82.00 TO STA. 4201+08.13
STA. 4207+86.93 TO STA. 4268+65.75

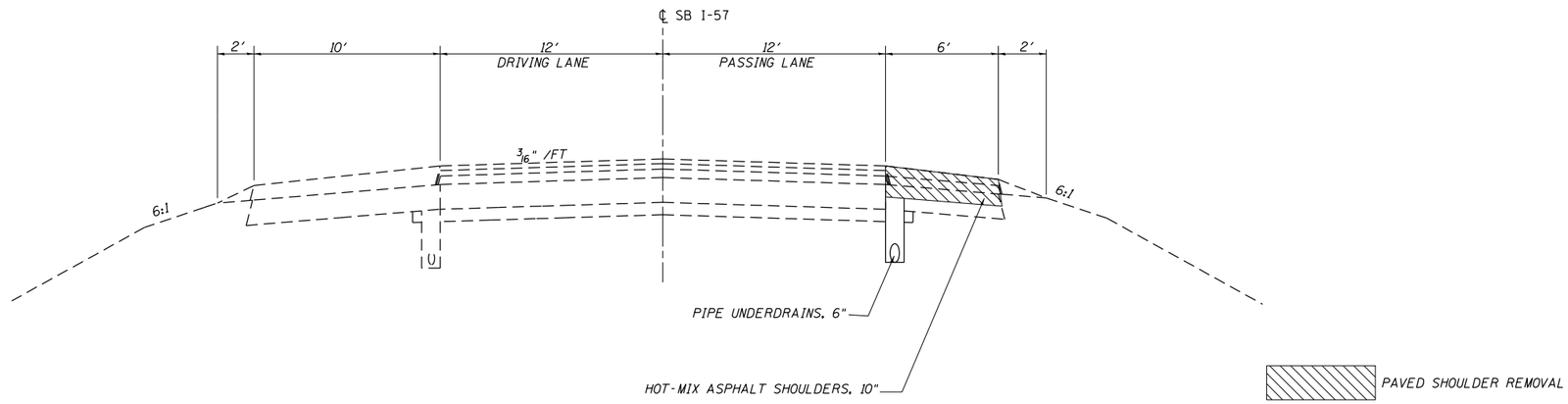

NOTE: NOTE TO SCALE

STAGE 1A TYPICAL CROSS SECTION

SOUTHBOUND LANE ONLY
STA. 3308+82.00 TO STA. 4201+08.13
STA. 4207+86.93 TO STA. 4268+65.75

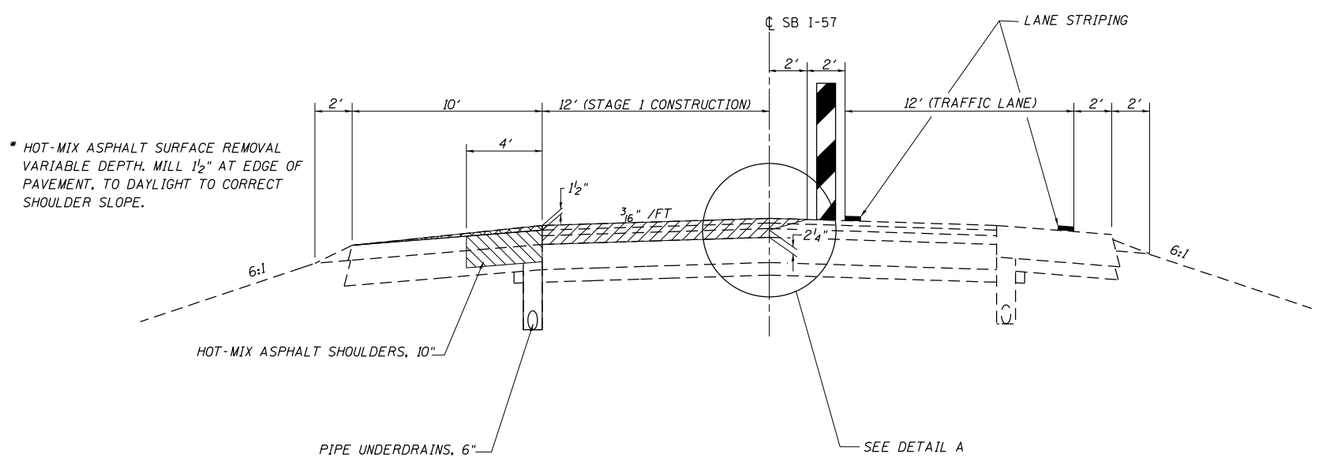

DETAIL A

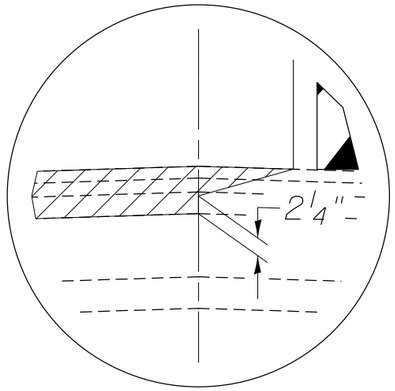

PAVED SHOULDER REMOVAL

HOT-MIX ASPHALT SURFACE REMOVAL, 6"

HOT-MIX ASPHALT SURFACE REMOVAL, VARIABLE DEPTH

NOTE: NOTE TO SCALE

• (25-6-1)RS-8 & (13-1)RS-2
•• EFFINGHAM, CLAY

FILE NAME = c:\pw_work\pwidot\teasleyck\d0181558\d774450-sht-typicals.dgn	USER NAME = teasleyck	DESIGNED -	REVISED -	STATE OF ILLINOIS DEPARTMENT OF TRANSPORTATION	STAGING TYPICAL CROSS SECTION	F.A.I. RTE.	SECTION	COUNTY	TOTAL SHEETS / SHEET NO.
		DRAWN -	REVISED -			57	•	••	87 / 18
	PLOT SCALE = 40.0000 ' / in.	CHECKED -	REVISED -			CONTRACT NO. 74450			
	PLOT DATE = 10/18/2012	DATE -	REVISED -		SCALE: NA / SHEET NO. 1 OF 6 SHEETS / STA. TO STA.	ILLINOIS FED. AID PROJECT			