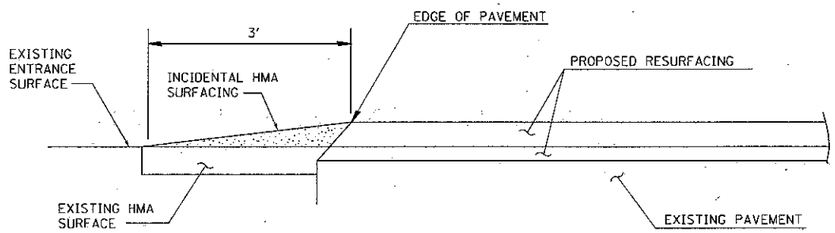

FEATHEREDGE DETAIL
SECTION A-A

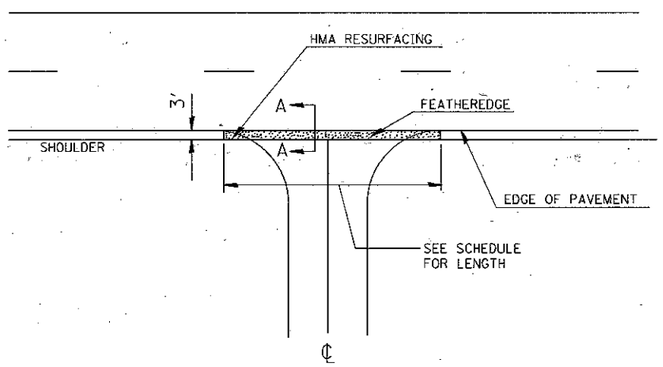

CE,PE,FE
ENTRANCE DETAIL

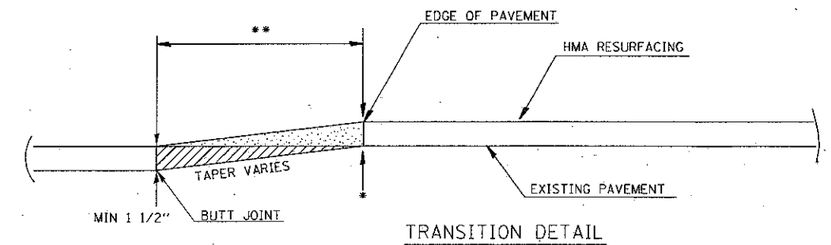

TRANSITION DETAIL
SECTION A-A
BUTT-JOINT ADDITION

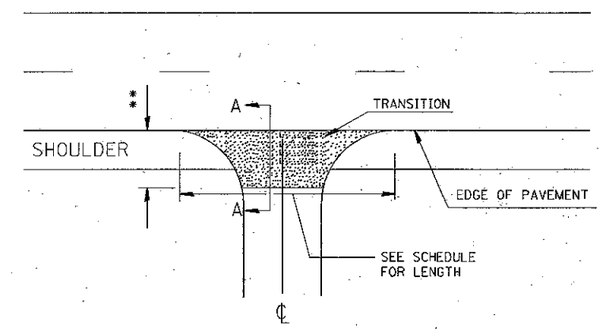

SIDEROAD DETAIL

*EOP ELEVATION CHANGE	**TOTAL TRANSITION LENGTH
3/4"	3.5'
1"	5'
1-1/2"	7.5'
2"	10'
2-1/2"	12.5'
3"	15'
3-1/2"	17.5'
4"	20'
4-1/2"	22.5'
5"	25'
5-1/2"	27.5'
6"	30'

NOTE:
WHERE THE HMA TRANSITION IS MATCHING INTO AN EXISTING HMA SIDE ROAD SURFACE, A MILLED BUTT JOINT SHALL BE CONSTRUCTED WITHIN THE LIMITS OF THE TOTAL TRANSITION LENGTH ON THE LOCAL ROUTE.

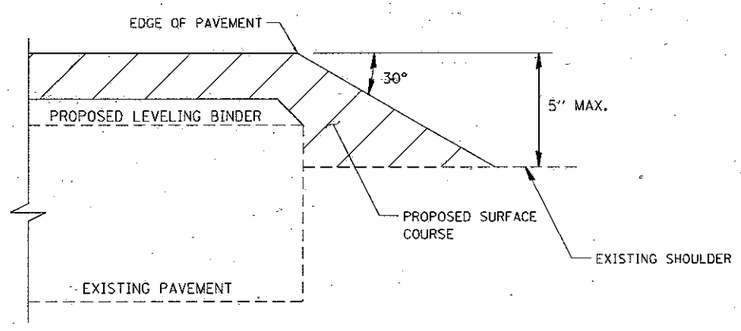

SAFETY EDGE DETAIL

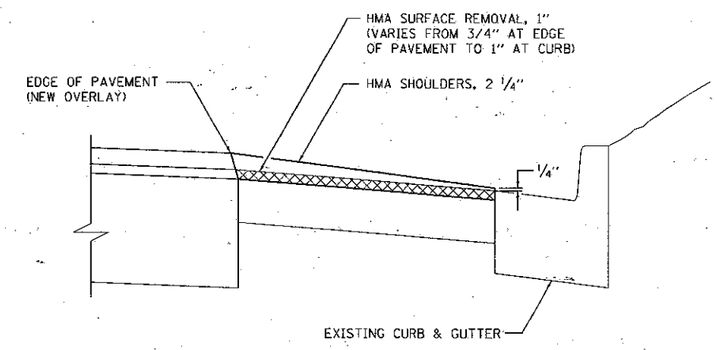

CURBED SHOULDER TREATMENT DETAIL

MS 1.768 LT TO MS 1.806 LT
MS 3.868 LT TO MS 3.923 LT
MS 3.868 RT TO MS 3.915 RT

DRIVER = ils\Bentley8\print\plotdrv\ILDOT\ILDOT_pdf_bw.pltcfg
FILE NAME = A:\DRIVE\2011\1804-01\CAD\Plans\11804-01-sht-details-2.dgn

Foth Infrastructure & Environment, LLC	USER NAME = jlf1	DESIGNED - JLF	REVISED -	STATE OF ILLINOIS DEPARTMENT OF TRANSPORTATION	DETAILS
	PRINTER =	DRAWN - MSJ	REVISED -		
	PLOT SCALE = 2.00 ' / in.	CHECKED - KEJ	REVISED -		
	PLOT DATE = 1/12/2012	DATE - 01/13/2012	REVISED -		- SHEET NO. OF SHEETS STA. TO STA.

F.A.P. RTE.	SECTION	COUNTY	TOTAL SHEETS	SHEET NO.
322	(7, 8)RS-2	WASHINGTON	15	10
		CONTRACT NO. 76E91		
		ILLINOIS FED. AID PROJECT		