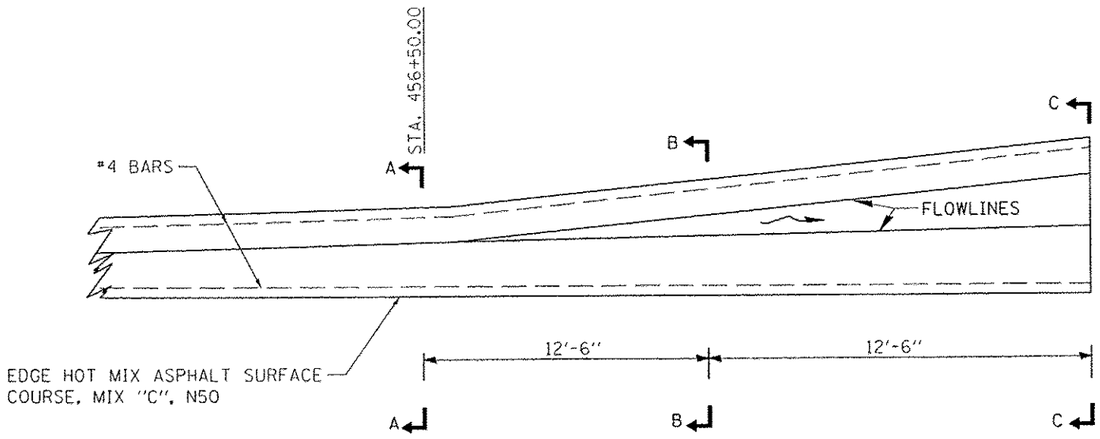

PLAN

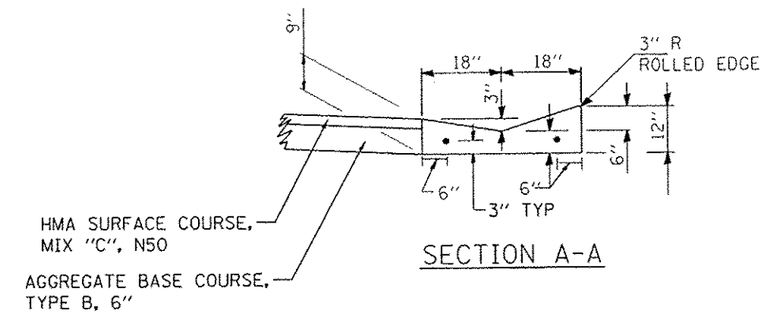

SECTION A-A

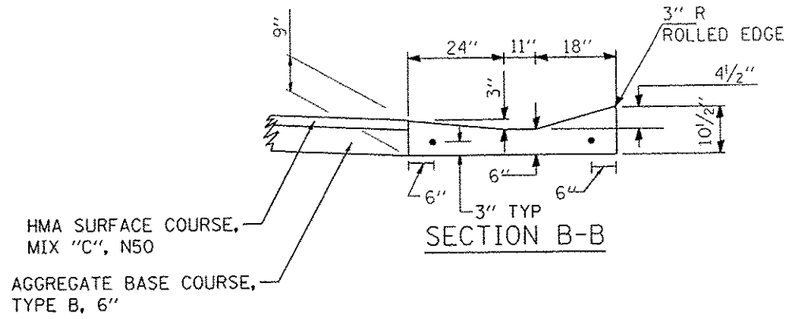

SECTION B-B

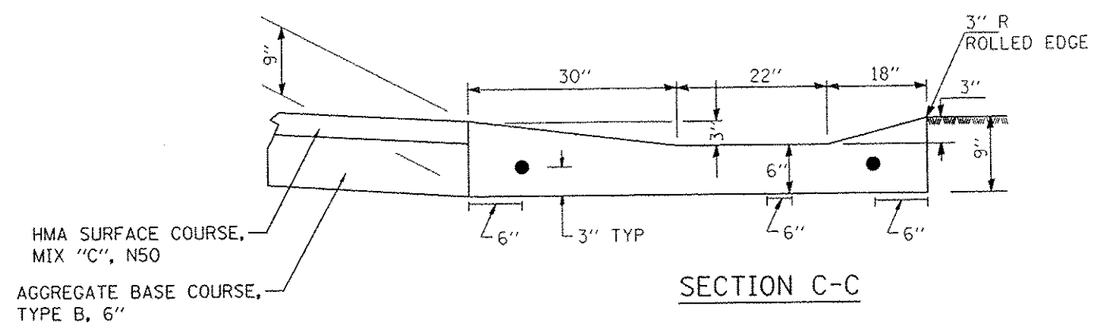

SECTION C-C

FILE NAME = S:\237\2012\23712003.00 (Trail Glen to Springdale)\CADD\CADD Sheets\D489639-sht-detail-drawn outlet.dgn	USER NAME = ccmartin	DESIGNED -	REVISED -	PEORIA PARK DISTRICT	ROCK ISLAND GREENWAY (GLEN AVE TO WAR MEMORIAL DR) TYPE A GUTTER OUTLET DETAIL	F.A. RTE.	SECTION	COUNTY	TOTAL SHEETS	SHEET NO.
MAURER-STUTZ ENGINEERS SURVEYORS	PLOT SCALE = 100.0000 ' / in.	CHECKED -	REVISED -				11-P4002-04-BT	PEORIA	73	41
	PLOT DATE = 4/4/2013	DATE -	REVISED -		SCALE: SHEET OF SHEETS STA. TO STA.			CONTRACT NO. 89639		
							ILLINOIS FED. AID PROJECT			