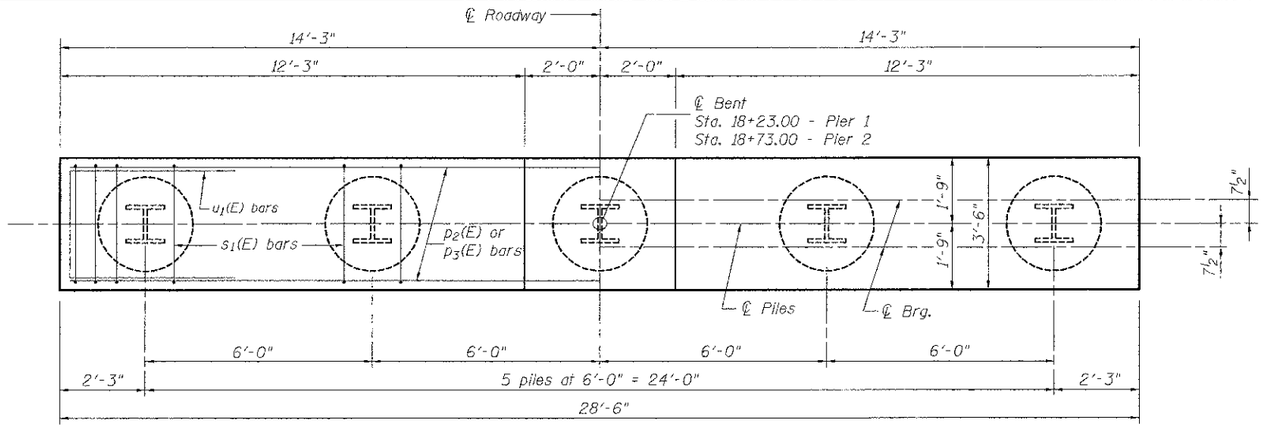

PLAN

PILE DATA

	PIER 1	PIER 2
Type:	Steel HP 12x63	Steel HP 12x63
Nominal Required Bearing:	497 k	497 k
Factored Resistance Available:	273 k	273 k
Est. Length:	52 ft.	32 ft.
No. Production Piles:	4	5
No. Test Piles:	1	0

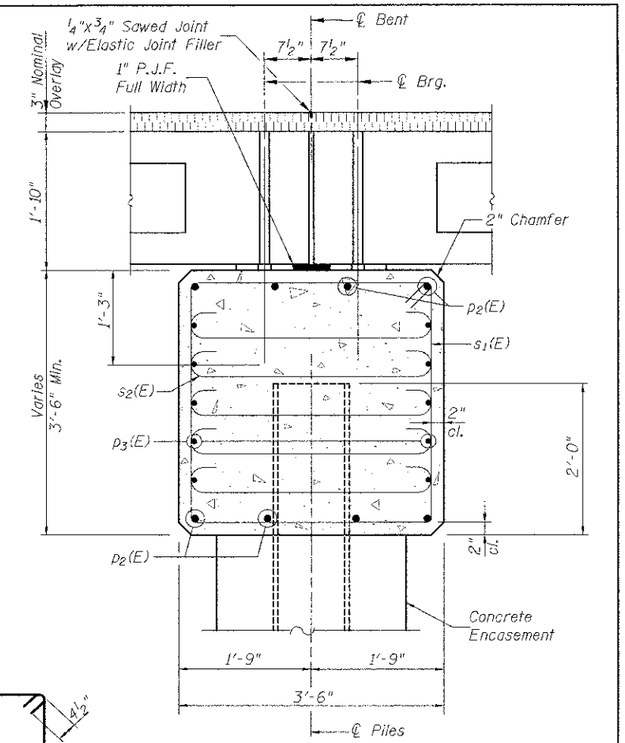

SECTION THRU PIER

(at Right Angles)

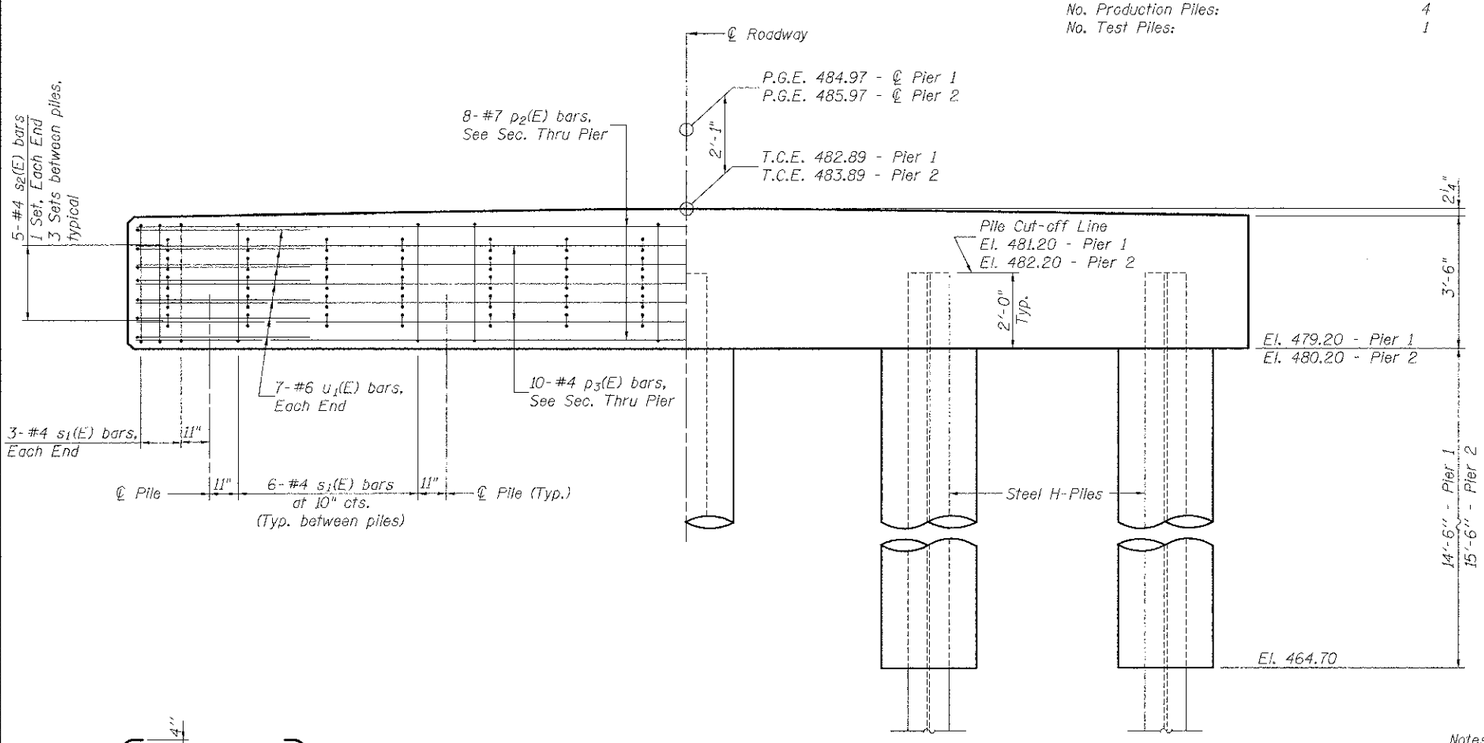

ELEVATION

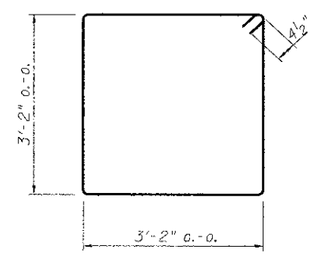

BAR s_1(E)

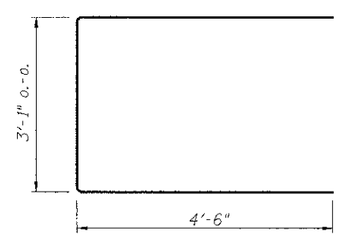

BAR u_1(E)

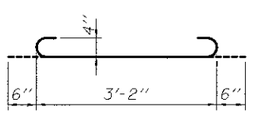

BAR s_2(E)

BILL OF MATERIAL FOR ONE PIER

Bar	No.	Size	Length	Shape
p_2(E)	8	#7	28'-2"	
p_3(E)	10	#4	28'-2"	
s_1(E)	30	#4	13'-5"	
s_2(E)	70	#4	4'-2"	
u_1(E)	14	#6	12'-1"	
Concrete Structures			Cu. Yd.	13.3
Concrete Encasement - Pier 1			Cu. Yd.	13.2
Concrete Encasement - Pier 2			Cu. Yd.	14.1
Reinforcement Bars, Epoxy Coated			Pound	1,370
Furnishing Steel Piles HP 12x63 - Pier 1			Foot	208
Furnishing Steel Piles HP 12x63 - Pier 2			Foot	160
Driving Steel Piles - Pier 1			Foot	208
Driving Steel Piles - Pier 2			Foot	160
Test Pile Steel HP 12x63 - Pier 1			Each	1

Notes:

For details of piles and concrete encasement see sheet 9 of 10.

Space reinforcement in pile cap to miss dowel rods.

If a portion of the concrete encasement is under water, reinforcement may be placed under water into forms. Concrete shall be tremied according to Article 503.08 of the Standard Specifications to an elevation of 1'-0" above the water line at the time of construction.

FILE NAME	USER NAME = USERUSER	DESIGNED - K.M.M	REVISED -
		DRAWN - K.H.L.	REVISED -
	PLOT SCALE = 2.0000 ' / IN.	CHECKED - L.D.G.	REVISED -
	PLOT DATE = 4/5/2011	DATE -	REVISED

STATE OF ILLINOIS
DEPARTMENT OF TRANSPORTATION

PIER DETAILS

SCALE: | SHEET NO. 7 OF 10 SHEETS | STA. | TO STA.

TR	SECTION	COUNTY	TOTAL SHEETS	SHEET NO.
156	02-04116-00-BR	BOND	28	19
	SN 003-3414	CONTRACT NO. 97521		
		ILLINOIS FED. AID PROJECT		

HMG ENGINEERS, INC. LAKE RD., P.O. BOX 70 CARLYLE, IL 62231 (618) 594-2711 WWW.HMGENGINEERS.COM

HMG NO 5119