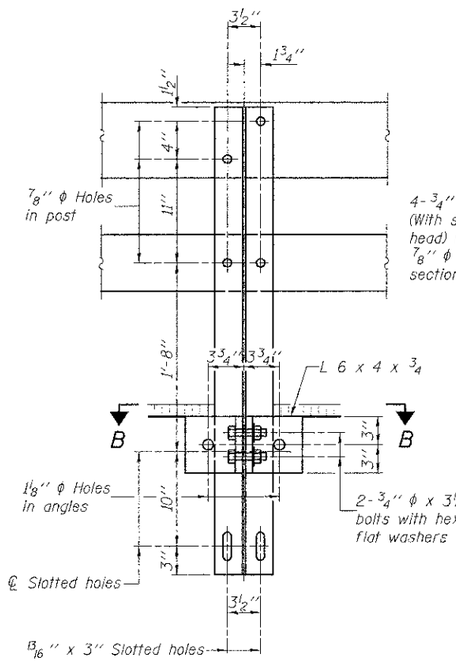

SECTION A-A

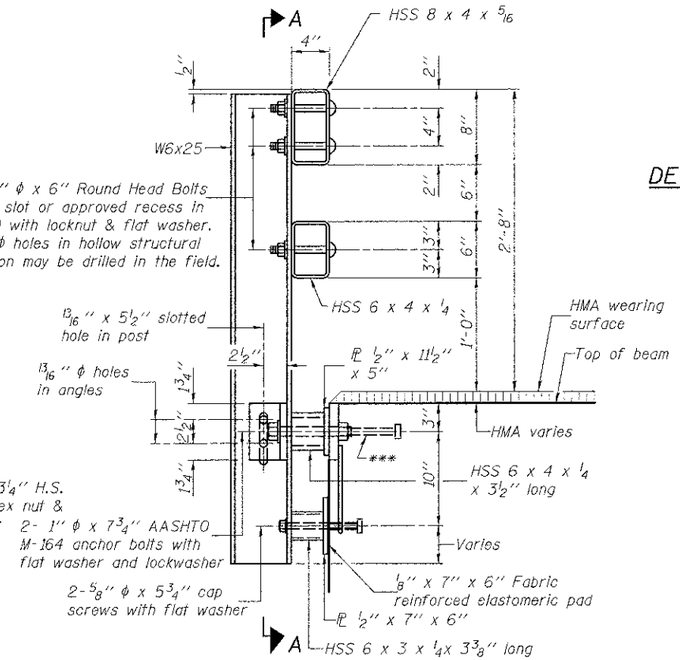

SECTION AT RAIL POST

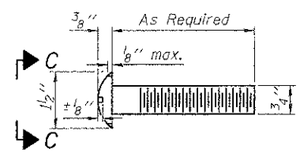

DETAIL OF ¾" φ ROUND HEAD BOLT

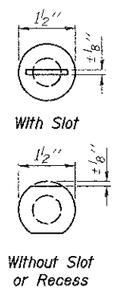

VIEW C-C

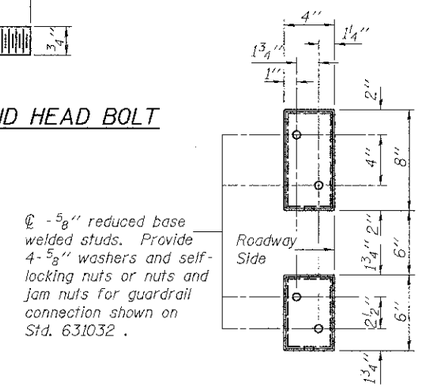

VIEW D-D

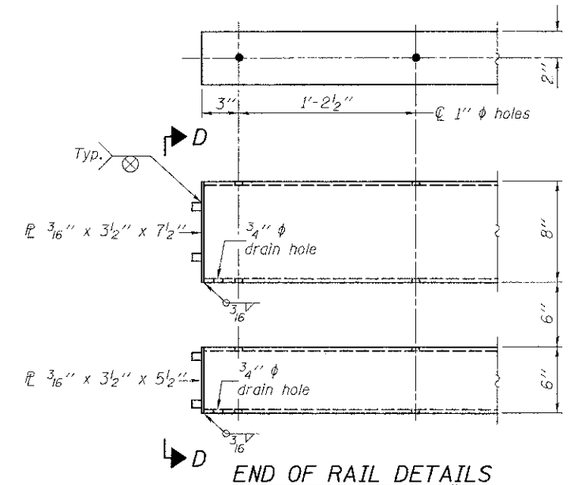

END OF RAIL DETAILS

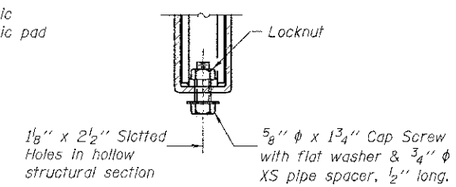

RAIL SPLICE CONNECTION AT EXPANSION JT.

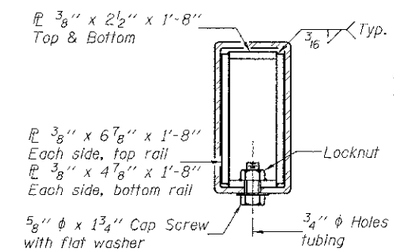

SECTION AT RAIL SPLICE

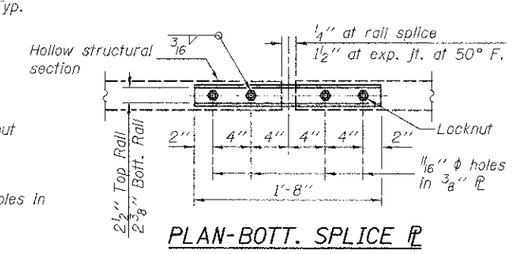

PLAN-BOTT. SPLICE PL TYPICAL

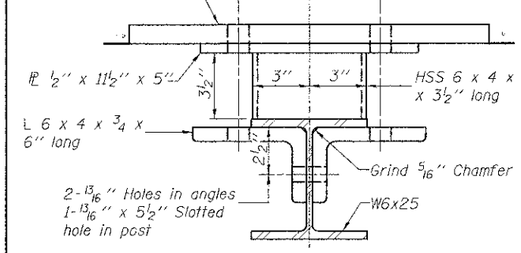

SECTION B-B

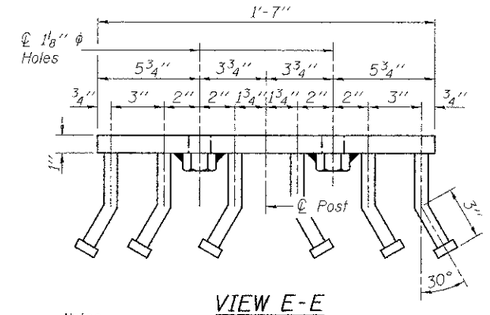

VIEW E-E

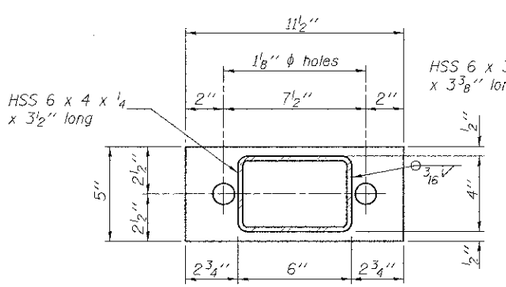

PL ½" x 11½" x 5"

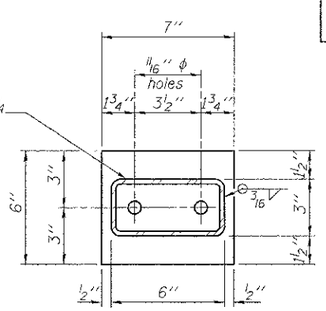

PL ½" x 7" x 6"

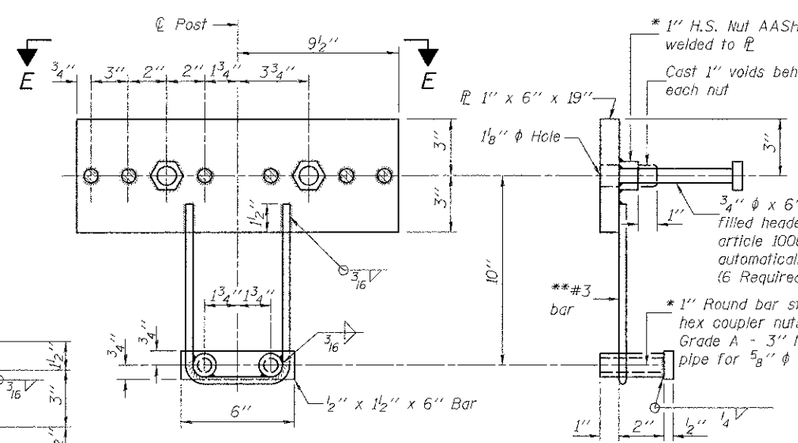

ANCHOR DEVICE

Notes:

All field drilled holes shall be coated with an approved zinc rich paint before erection.

For multi-span bridges, sufficient ¼" x 6" x 1'-2" galvanized steel shims shall be provided to align rail between adjacent spans. Cost included with Steel Railing, Type SM.

All steel rail members shall be galvanized according to Article 509.05 of the Standard Specifications.

*** The studs of the anchor devices shall be placed below the top reinforcement bars and the outermost longitudinal reinforcement bar shall be placed directly above the studs of the rail post anchor device.

*Threaded areas shall be plugged or blocked off during casting of beam. Galvanized after fabrication.

** Whenever the lower insert assemblies interfere with strand locations, the #3 bars shall be cut and adjusted in order to allow raising or lowering of the lower inserts. Maximum adjustment not to exceed ½".

BILL OF MATERIAL

Item	Unit	Quantity
Steel Railing, Type SM	Foot	240

R-34HMAWS 7-1-10 (6'-3" Maximum Post Spacing) (1¼" minimum to 3⅛" maximum HMA thickness)

FILE NAME =	USER NAME = USERNAME	DESIGNED K.M.M	REVISED
		DRAWN K.H.L.	REVISED
	PLOT SCALE = 4.0000 ' / IN.	CHECKED L.D.G.	REVISED
	PLOT DATE = 3/27/2013	DATE	REVISED

STATE OF ILLINOIS
DEPARTMENT OF TRANSPORTATION

STEEL RAILING, TYPE SM WITH HOT-MIX ASPHALT WEARING SURFACE

SCALE: | SHEET NO. 8 OF 10 SHEETS | STA. | TO STA.

TR	SECTION	COUNTY	TOTAL SHEETS	SHEET NO.
156	02-04116-00-BR	BOND	28	20
	SN 003-3414	CONTRACT NO. 97521		
		ILLINOIS FED. AID PROJECT		

HMG NO 5119