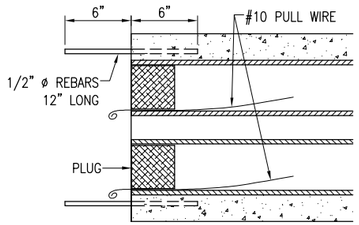

TYPICAL SECTION
(NOT TO SCALE)

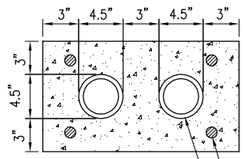

2-DUCT BANK
(NOT TO SCALE)

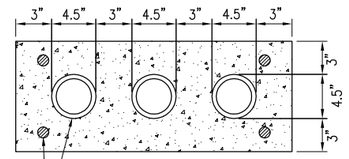

3-DUCT BANK
(NOT TO SCALE)

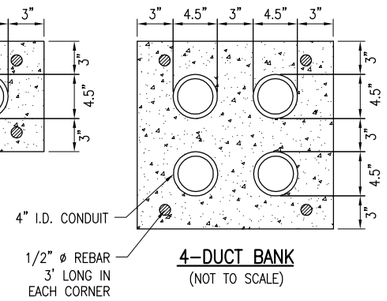

4-DUCT BANK
(NOT TO SCALE)

DUCT BANK NOTES:

1. DIMENSIONS FOR CONCRETE COVERAGE AND SEPARATION BETWEEN DUCTS ARE MINIMUM.
2. INCLUDE DUCT SPACERS AS MANUFACTURED BY UNDERGROUND DEVICES INC., OR APPROVED EQUAL TO MAINTAIN PROPER SEPARATION OF CONDUITS.
3. REBAR IS REQUIRED TO ACCOMMODATE FUTURE DUCT EXTENSIONS & INTERFACE AT DUCT BANK TERMINATIONS. CONCRETE ENCASED DUCT BANKS TERMINATING IN HANDHOLES REQUIRE REBAR AT TERMINATIONS.
4. CONDUITS FOR CONCRETE ENCASED DUCT SHALL BE SCHEDULE 40 PVC CONFORMING TO ITEM 110.
5. MINIMUM DEPTH OF TOP OF DUCT ENCASEMENT SHALL BE 18" BELOW FINISHED GRADE.
6. HIGH VOLTAGE AND LOW VOLTAGE CIRCUITS SHALL NOT BE INSTALLED IN THE SAME RACEWAY, CONDUIT, DUCT, HANDHOLE, OR MANHOLE.
7. HOMERUN CABLES FOR A RESPECTIVE CIRCUIT SHALL BE INSTALLED IN THE SAME RACEWAY OR DUCT.
8. DUCT INTERFACE TO HANDHOLES OR MANHOLES WILL BE CONSIDERED INCIDENTAL TO THE RESPECTIVE DUCT PAY ITEM.

CABLE & DUCT MARKER NOTES:

1. THE COST OF ALL TURF AND PAVEMENT DUCT MARKERS SHALL BE INCIDENTAL TO THE DUCT. THE COST OF ALL CABLE MARKERS SHALL BE INCIDENTAL TO THE CABLE.
2. BITUMINOUS PAVEMENT DUCT MARKER AND CONCRETE DUCT MARKER TO BE PROVIDED AT EACH END OF EACH DUCT AS SHOWN ON THE LOCATION PLAN. FOR CONCRETE PAVEMENT, THE LETTER "D" SHALL BE IMPRESSED IN THE PAVEMENT INSTEAD OF THE MARKER. THE LETTER SHALL BE FORMED AS DESCRIBED IN NOTE 4.
3. CABLE MARKERS SHALL BE PLACED AT CHANGES OF DIRECTION AND APPROXIMATELY EVERY 200' ALONG CABLE RUNS.
4. CONCRETE CABLE MARKERS AND DUCT MARKERS SHALL HAVE LETTERS 4" HIGH, 3" WIDE WITH WIDTH OF STROKE ½" AND ¼" DEEP. ALL LETTERS, NUMBERS AND ARROWS TO BE IMPRESSED.

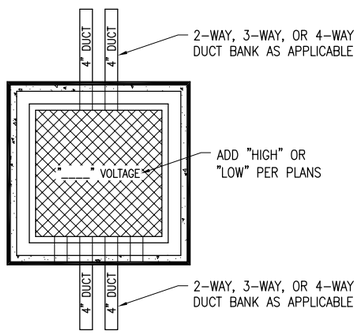

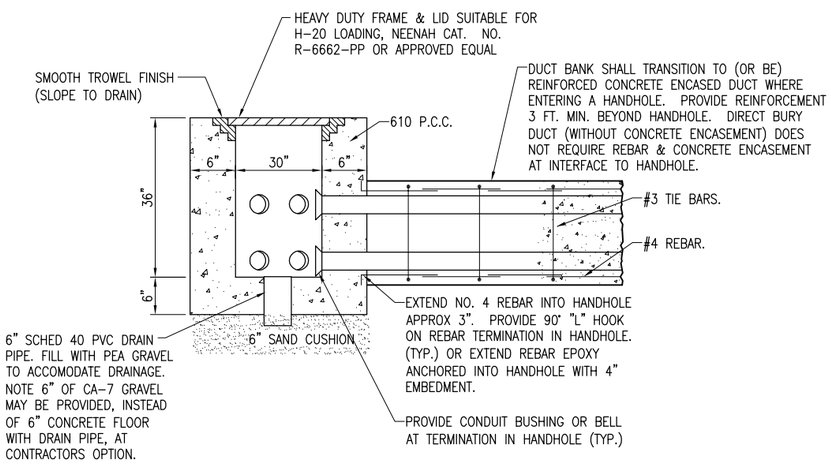

NOTES:

1. LIDS FOR LOW VOLTAGE HANDHOLES SHALL BE LABELED "LOW VOLTAGE". LIDS FOR HIGH VOLTAGE HANDHOLES SHALL BE LABELED "HIGH VOLTAGE". COORDINATE LETTERING WITH MFR.
2. HANDHOLES MAY BE CAST IN PLACE OR PRECAST. PRECAST MANUFACTURERS MUST BE ON THE IDOT (ILLINOIS DEPT. OF TRANSPORTATION) APPROVED LIST OF CERTIFIED PRECAST CONCRETE PRODUCERS.
3. ALL CORING, INTERFACE, AND LABOR ASSOCIATED WITH CONDUIT, DUCT, CABLE IN UNIT DUCT, AND / OR CABLE ENTRIES WILL BE CONSIDERED INCIDENTAL TO THE INSTALLATION OF THE HANDHOLE AND NO ADDITIONAL COMPENSATION WILL BE ALLOWED.

ELECTRICAL HANDHOLE
"NOT TO SCALE"

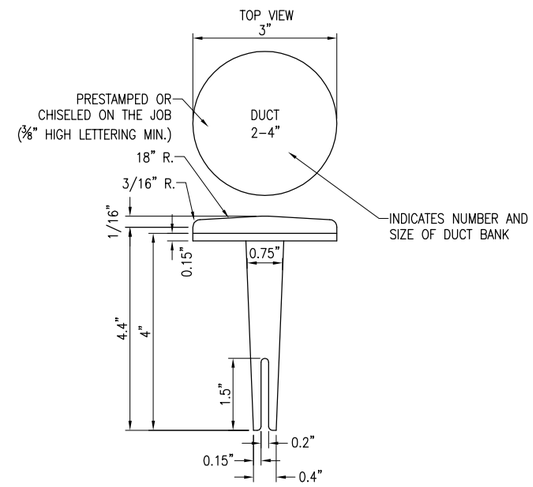

BITUMINOUS PAVEMENT DUCT MARKERS
"NOT TO SCALE"

NOTES:

1. TOP OF MARKER SHALL BE FLUSH WITH FINISHED PAVEMENT SURFACE. MARKER MAY BE INSTALLED IN A DRILLED HOLE AND SECURED WITH EPOXY GLUE.
2. BRASS DUCT MARKERS ARE AVAILABLE FROM G&S FOUNDRY & MANUFACTURING CO., INC., 210 KASKASKIA DRIVE, RED BUD, IL 62278, PHONE: (618)-282-4114

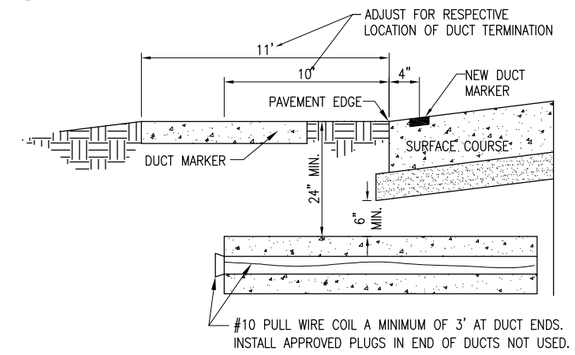

UNDERGROUND ELECTRICAL DUCT
(NOT TO SCALE)

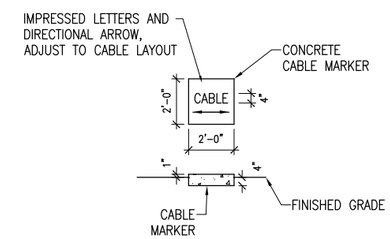

TURF CABLE MARKERS
"NOT TO SCALE"

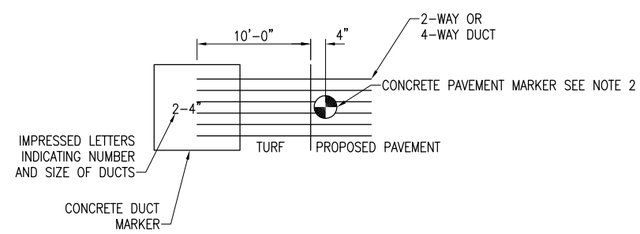

DUCT MARKER DETAIL
"NOT TO SCALE"

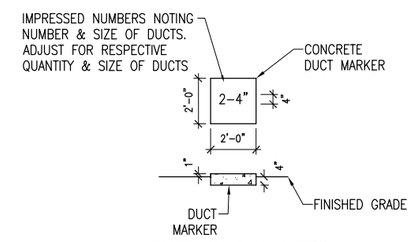

TURF DUCT MARKERS
"NOT TO SCALE"

REVISION	DATE

LITCHFIELD MUNICIPAL AIRPORT
LITCHFIELD, ILLINOIS

IL. PROJ.: 3LF-4194 BLOCK GRANT PROJ.: 3-17-0063-B19

Hanson Proj. No. 12A0062D
Filename E-504-DETL.dwg
Scale NOT TO SCALE
Date 01/11/13

LAYOUT	KNL	12/31/12
DRAWN	BAK	01/03/13
REVIEWED	CAH/KNL	01/10/13

HANSON

©Copyright Hanson Professional Services Inc. 2013
Hanson Professional Services Inc.
1525 South Sixth Street
Springfield, Illinois 62703-2886
Ph: (217) 788-2450 Fax: (217) 788-2503
www.hanson-inc.com
Offices Nationwide

REALIGN
TAXIWAY "A"

ELECTRICAL DETAILS
SHEET 4

FEB 05, 2013 4:51 PM HAGLO00382
pw:\\spi-svr306.hanson.dom:Hanson Projects\Documents\12Jobs\12A0062\12A0062D\CAD\Airport\Sheets\504BORDER