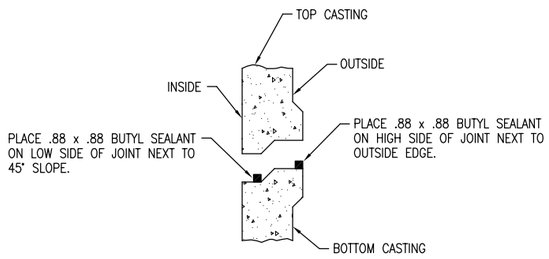

DETAIL (B)
N.T.S.

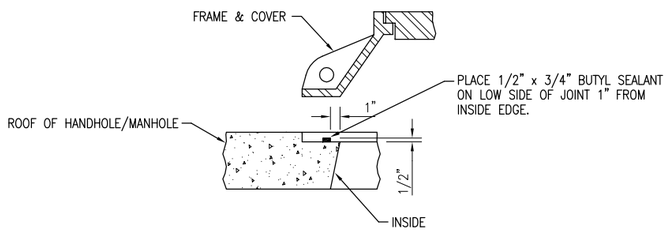

DETAIL (A)
N.T.S.

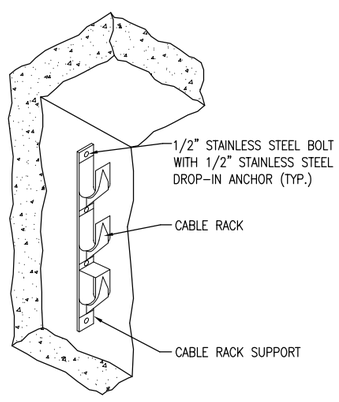

CABLE RACK
N.T.S.

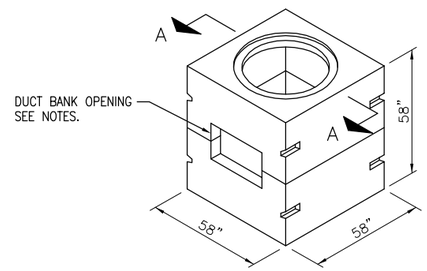

PRECAST 4'x4'x4' MANHOLE
N.T.S.

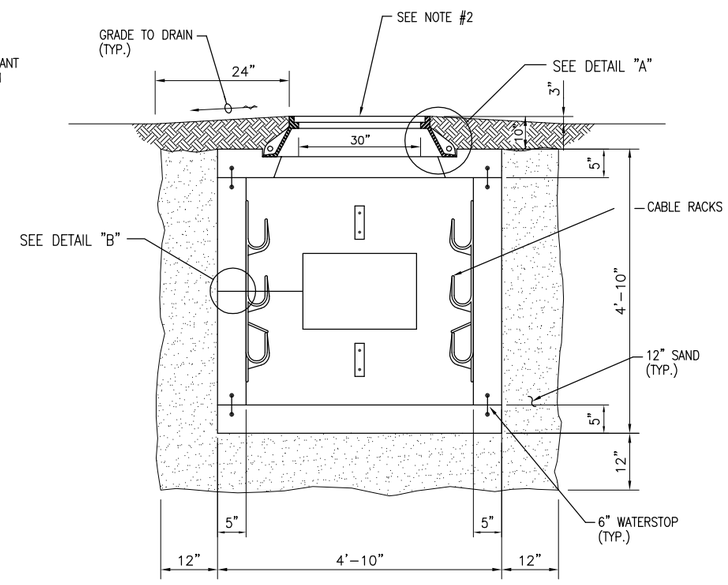

SECTION (A)
N.T.S.

PRECAST 4' x 4' x 4' MANHOLE DETAILS
N.T.S. (NOT TO SCALE)

PRECAST 4'x4'x4' ELECTRICAL MANHOLE NOTES

1. 4'x4'x4' ELECTRICAL MANHOLE SHALL BE CONSTRUCTED TO MEET THE FOLLOWING:

   DESIGN CRITERIA:
   1) DESIGN SPECIFICATION: ACI 318, AASHTO LOAD FACTOR DESIGN METHOD, AND ASTM C858
   2) DESIGN LOADING: AASHTO HS20 (32,000 LB/AXLE)
   3) LIVE LOAD SURCHARGE: .5% OF THE WHEEL LOADING APPLIED TO 8'-0" OF DEPTH.
   4) CONCRETE COMPRESSIVE STRENGTH: F'c = 4500 PSI
   5) REINFORCING STEEL: ASTM A706, Fy = 60000 PSI

   DESIGN ASSUMPTIONS:
   1) GROUND WATER LEVEL: 3'-6" BELOW GRADE.
   2) EARTH COVER: 2'-0" MINIMUM TO 5'-0" MAXIMUM
   3) LIVE LOAD IMPACT: 2'-0" 1 = 20%
      2'-1" TO 2'-11" 1 = 10%
      3'-0" TO 5'-0" 1 = 0%
   4) COEFFICIENT OF ACTIVE EARTH PRESSURE: Ka – 0.3
   5) SPECIFIC WEIGHT OF STD. AGGREGATE CONCRETE" 150 PCF
   6) SPECIFIC WEIGHT OF DRY EARTH: 100 PCF
   7) SPECIFIC WEIGHT OF SATURATED EARTH: 120 PCF
   8) EQUIVALENT FLUID PRESSURE OF DRY EARTH: 30 PSF
   9) EQUIVALENT FLUID PRESSURE OF SATURATED EARTH: 80 PSF

   THE SUPPLIER SHALL PROVIDE CERTIFICATION THAT THE PRECAST MANHOLES MEET OR EXCEED THESE REQUIREMENTS PRIOR TO INSTALLATION.

2. MANHOLE FRAME & LID SHALL BE CAPABLE OF WITHSTANDING MINIMUM 50,000 POUND LOADS. MANHOLE FRAME & LID SHALL BE NEENAH CATALOG NO. R-1640-C OR APPROVED EQUAL. LID FOR HIGH VOLTAGE MANHOLE SHALL BE LABELED "HIGH VOLTAGE". LID FOR LOW VOLTAGE MANHOLE SHALL BE LABELED "LOW VOLTAGE" OR "OV-600V".

3. COORDINATE DUCT BANK INTERFACE & OPENINGS WITH THE MANHOLE MFR. CONTRACTOR SHALL SLOPE DUCT BANK TO PRECAST MANHOLE OPENINGS. ALL OPENINGS SHALL BE SEALED WATERTIGHT AFTER DUCT BANK INSTALLATION.

4. 4'x4'x4' MANHOLE SHALL BE MANUFACTURED BY A CONCRETE ELECTRICAL MANHOLE PRODUCER ON THE ILLINOIS DEPARTMENT OF TRANSPORTATION APPROVED LIST OF CERTIFIED PRECAST CONCRETE PRODUCERS. MANHOLE PRODUCER SHALL SUBMIT CERTIFICATION THAT THE RESPECTIVE PRE-CAST MANHOLES ARE MANUFACTURED IN THE UNITED STATES.

5. 4'x4'x4' MANHOLE SHALL BE PAID FOR UNDER ITEM AR110710 ELECTRICAL MANHOLE PER EACH.

6. CABLE RACKS SHALL BE HEAVY DUTY CORROSION RESISTANT NYLON MATERIAL WITH CORROSION RESISTANT STAINLESS STEEL MOUNTING HARDWARE; UNDERGROUND DEVICES, INC. CAT. NO. 3SR1N, 3SR2N OR 3SR3N OR EQUAL. PROVIDE AT LEAST TWO TRIPLE HOOK CABLE RACKS ON EACH MANHOLE WALL, SPACED TO SUPPORT RESPECTIVE CABLES.

7. COORDINATE INSTALLATION OF MANHOLES WITH RESPECTIVE FINISHED GRADE ELEVATIONS.

ELECTRICAL MANHOLE SCHEDULE

MANHOLE NUMBER	MANHOLE TYPE	LID LETTERING	PAY ITEM
MH #1	4'x4'x4' ELECTRICAL MANHOLE	"LOW VOLTAGE" OR "OV-600V ELECTRIC"	AR110710
MH #2	4'x4'x4' ELECTRICAL MANHOLE	"LOW VOLTAGE" OR "OV-600V ELECTRIC"	AR110710
MH #3	4'x4'x4' ELECTRICAL MANHOLE	"LOW VOLTAGE" OR "OV-600V ELECTRIC"	AR110710
MH #4	4'x4'x4' ELECTRICAL MANHOLE	"LOW VOLTAGE" OR "OV-600V ELECTRIC"	AR110710
MH #5	4'x4'x4' ELECTRICAL MANHOLE	"HIGH VOLTAGE"	AR110710
MH #6	4'x4'x4' ELECTRICAL MANHOLE	"HIGH VOLTAGE"	AR110710

DATE	REVISION

LITCHFIELD MUNICIPAL AIRPORT
LITCHFIELD, ILLINOIS

IL. PROJ.: 3LF-4194 BLOCK GRANT PROJ.: 3-17-0063-B19

Hanson Proj. No. 12A0062D
Filename E-505-DETL.dwg
Scale NOT TO SCALE
Date 01/11/13

LAYOUT	KNL	12/31/12
DRAWN	BAK	01/03/13
REVIEWED	CAH/KNL	01/10/13

HANSON

©Copyright Hanson Professional Services Inc. 2013
Hanson Professional Services Inc.
1525 South Sixth Street
Springfield, Illinois 62703-2886
Ph: (217) 788-2450 Fax: (217) 788-2503
www.hanson-inc.com
Offices Nationwide

REALIGN TAXIWAY "A"

4' X 4' X 4' ELECTRICAL MANHOLE

FEB 05, 2013 4:42 PM HAGLO00382
pw:\\sgi-svr306.hanson.dom:Hanson Projects\Documents\12Jobs\12A0062\12A0062D\CAD\Airport\Sheets\505BORDER