F.A.I. RTE.	SECTION	COUNTY	TOTAL SHEETS	SHEET NO.
59	*	WILL	102	41
STA.		TO STA.		
FED. ROAD DIST. NO. 1	ILLINOIS	FED. AID PROJECT		

* 99(1&2)AC-R-2 CONTRACT NO. 60B97

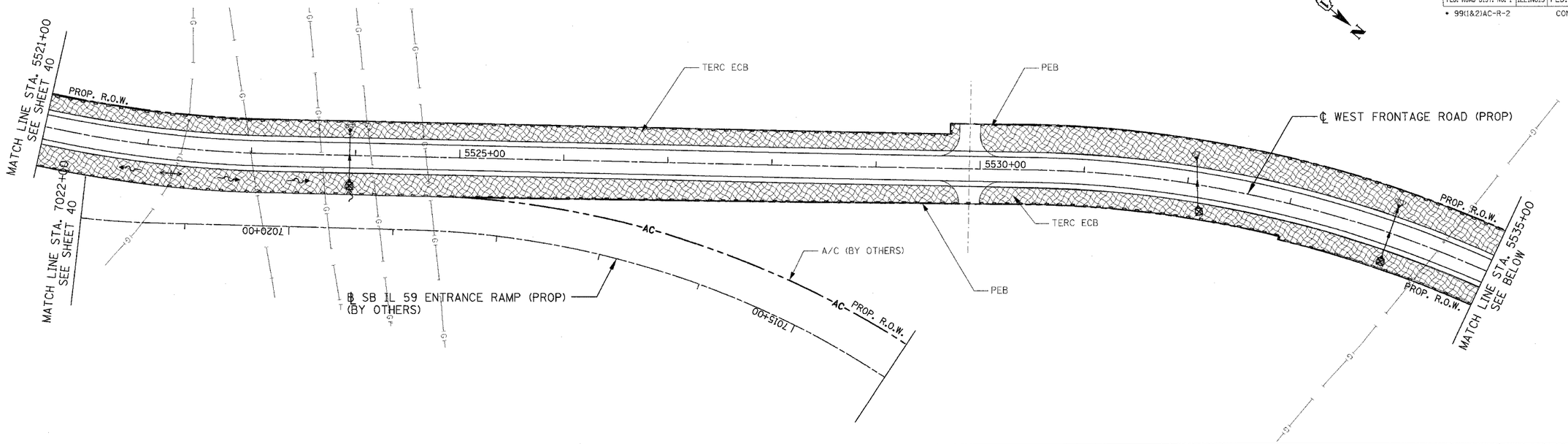

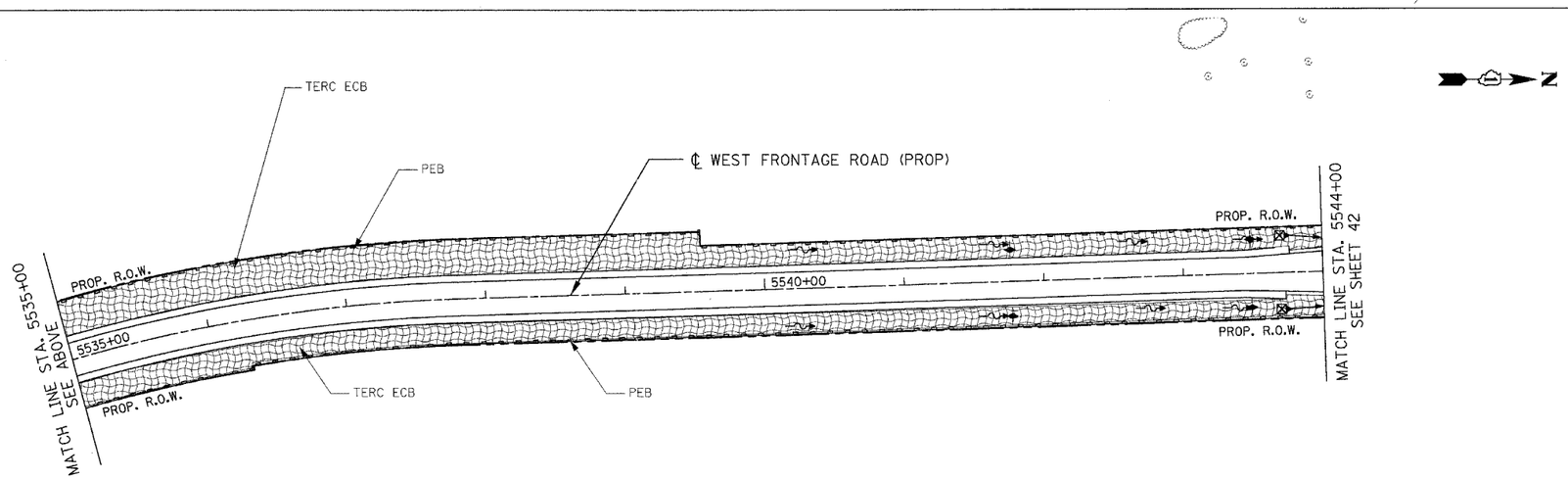

EROSION CONTROL LEGEND

- SEDIMENT BASIN
- INLET FILTERS
- INLET & PIPE PROTECTION
- PERIMETER EROSION BARRIER (PEB)
- TEMPORARY DITCH CHECK
- TEMPORARY EROSION CONTROL SEEDING AND EROSION CONTROL BLANKET (TERC ECB), UNLESS OTHERWISE NOTED
- EXISTING TEMPORARY EROSION CONTROL SEEDING AND EROSION CONTROL BLANKET (TERC ECB), UNLESS OTHERWISE NOTED
- R — STRUCTURE REMOVAL
- C — DRAINAGE STR. TO BE CLEANED
- ADJ — STRUCTURE TO BE ADJUSTED
- ECB — EROSION CONTROL BLANKET
- TEMPORARY PIPE REMOVAL
- TEMPORARY PAVEMENT, UNLESS OTHERWISE NOTED
- PAVEMENT REMOVAL, UNLESS OTHERWISE NOTED

NOTES:

1. FOR PERMANENT DRAINAGE STRUCTURE AND PIPE INFORMATION SEE SHEET 56.
2. PER STANDARD 2800001, ALL SEDIMENT BASINS TO BE PLACED AS SHOWN AND REMOVED AT THE END OF THE PROJECT. THE COST WILL BE INCLUDED IN THE CONTRACT UNIT PRICE BID PER CUBIC YARD FOR "EARTH EXCAVATION FOR EROSION CONTROL".
3. AGGREGATE EROSION CONTROL IS NOT REQUIRED FOR SEDIMENT BASINS WHERE THESE DISCHARGE TO STONE RIPRAP.
4. LATERAL SEWER PIPE TO MAINLINE SEWER SHALL HAVE THEIR UPSTREAM ENDS TEMPORARILY PLUGGED ACCORDING TO DETAILS OF SHEET 57, OR AS DIRECTED BY THE ENGINEER. PLUG WILL BE REMOVED UPON CONSTRUCTION OF REMAINING LATERAL PIPE, AS DIRECTED BY THE ENGINEER. COST OF TEMPORARY PLUG AND SUBSEQUENT REMOVAL FOR LATERAL STORM SEWER CONNECTIONS WILL NOT BE PAID FOR SEPARATELY, BUT WILL BE INCLUDED IN THE CONTRACT UNIT PRICE BID PER FOOT FOR STORM SEWERS, OF THE CLASS AND TYPE SPECIFIED.

REVISIONS	
NAME	DATE

ILLINOIS DEPARTMENT OF TRANSPORTATION
FAI 55 WEST FRONTAGE ROAD AT IL 59
SECTION: 99(1&2)AC-R-2

EROSION CONTROL STAGE I
STA. 5521+00 TO STA. 5544+00

SCALE: 1" = 50' DRAWN BY: SN
DATE: 03/22/2007 CHECKED BY: ACL

TENG
TENG & ASSOCIATES, INC.
ENGINEERS/ARCHITECTS/PLANNERS
200 N. MICHIGAN AVE. CHICAGO, IL 60601
TELEPHONE: 312/816-0000

..\ALT00264.DGN, ..\SUR00261.DGN, ..\ALT00264.DGN, ..\SUR00261.DGN, ..\TTB00267.DGN, ..\ROW00291.DGN, ..\UTL00264.DGN, ..\ROW00291.DGN, ..\UTL00264.DGN, ..\DRA00266.DGN, ..\DRA00267.DGN, ..\ERC00266.DGN, ..\DRA00266.DGN, ..\DRA00267.DGN, ..\MOT00266.DGN
3-21-2007, 4:44:35 T:\DOCUMENT\932790\CIVIL\DGN\ERC00266.DGN BONDHLUO