CONTRACT NO. 64560

F.A.P. RTE.	SECTION	COUNTY	TOTAL SHEETS	SHEET NO.
*	**	CARROLL	548	245
STA.		TO STA.		
FED. ROAD DIST. NO.	ILLINOIS	FED. AID PROJECT		

* ROUTE 17 (US 52 / IL 64)
** (1,2)RS & (3,1)RS-1

DETAIL OF PRECAST CONCRETE BOX CULVERTS AND END SECTIONS

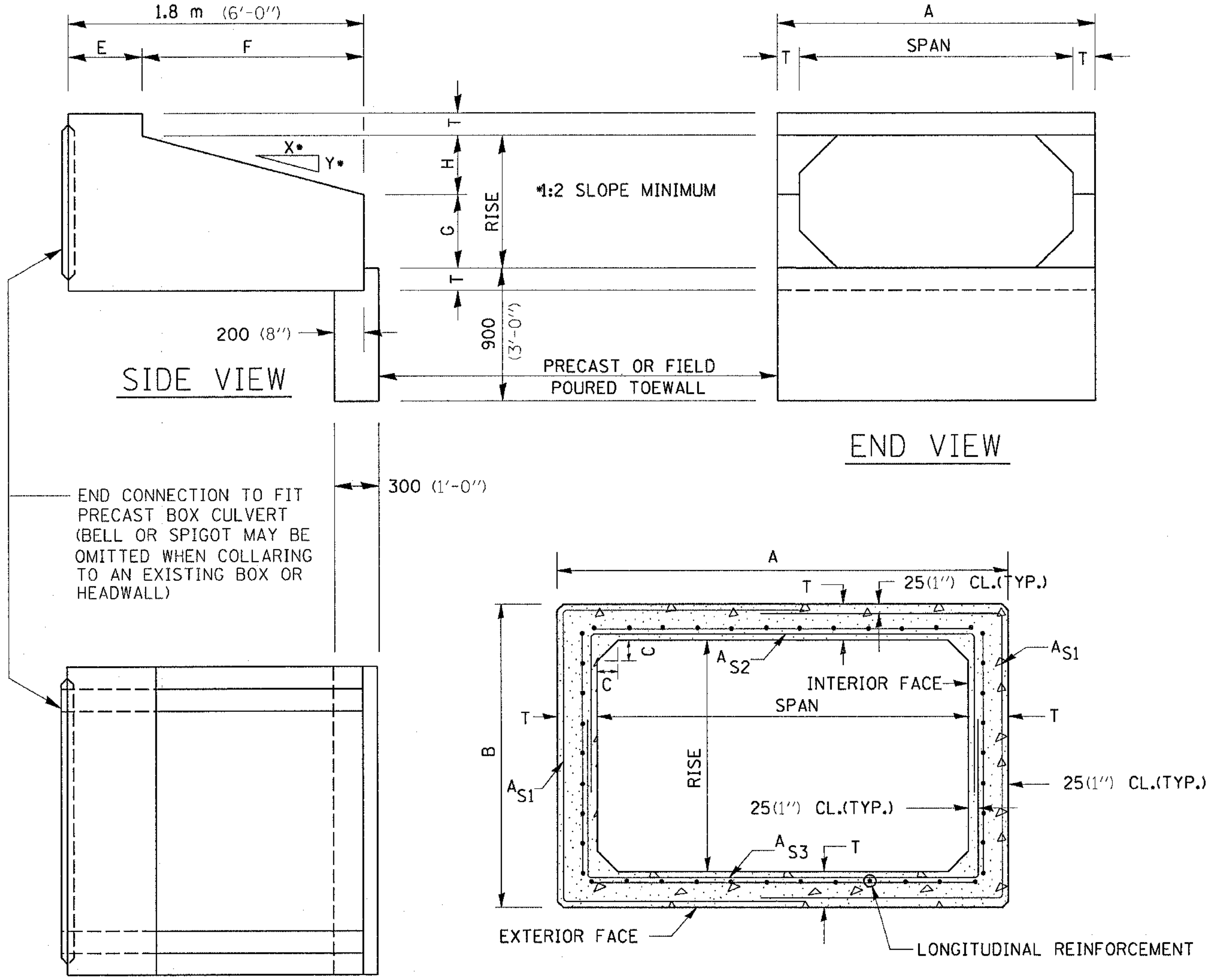

SIDE VIEW

END VIEW

PLAN

CROSS-SECTION

GENERAL NOTES

PRECAST CONCRETE BOX CULVERTS AND PRECAST CONCRETE BOX CULVERT END SECTIONS

THIS WORK CONSISTS OF FURNISHING AND INSTALLING PRECAST BOX CULVERTS AND BOX CULVERT END SECTIONS AS SHOWN ON THE PLANS AND SPECIFIED HEREIN.

IF THE EARTH COVER IS 600 (2 ft) OR MORE, THE PRECAST CONCRETE BOX CULVERT SECTIONS SHALL CONFORM TO THE REQUIREMENTS OF ASTM C789 EXCEPT THAT THE AGGREGATE SHALL CONFORM TO THE REQUIREMENTS OF ARTICLES 1003.02 AND 1004.02 OF THE STANDARD SPECIFICATIONS, WITH THE EXCEPTION OF A GRADATION.

IF THE EARTH COVER IS LESS THAN 600 (2 ft), THE PRECAST BOX CULVERT BARREL SECTIONS SHALL CONFORM TO THE REQUIREMENTS OF ASTM C850 AND THE END SECTIONS SHALL CONFORM TO THE REQUIREMENTS OF ASTM C789. WITH THE EXCEPTION OF GRADATION, THE AGGREGATE SHALL CONFORM TO THE REQUIREMENTS OF ARTICLES 1003.02 AND 1004.02 OF THE STANDARD SPECIFICATIONS.

ALL APPLICABLE REQUIREMENTS OF ARTICLE 540 OF THE STANDARD SPECIFICATIONS.

THE EXCAVATION AND BACKFILLING FOR PRECAST CONCRETE BOX CULVERT SHALL BE IN ACCORDANCE WITH THE REQUIREMENTS OF SECTION 502 OF THE STANDARD SPECIFICATIONS EXCEPT A LAYER OF POROUS GRANULAR BACKFILL, AT LEAST 150 (6") IN THICKNESS, SHALL BE PLACED BELOW THE ELEVATION OF THE BOTTOM OF THE BOX. THE POROUS GRANULAR BACKFILL SHALL BE PLACED TO EXTEND AT LEAST 600 (2 ft) EACH SIDE OF THE BOX. THE PRECAST CONCRETE BOX CULVERT SHALL BE LAID IN ACCORDANCE WITH THE APPLICABLE REQUIREMENTS OF ARTICLE 542.04 (d) OF THE STANDARD SPECIFICATIONS

SHOP PLANS FOR THE PRECAST CONCRETE BOX CULVERT SECTIONS AND THE END SECTIONS SHALL BE SUBMITTED IN ACCORDANCE WITH THE REQUIREMENTS OF ARTICLE 1042.03 (b) OF THE STANDARD SPECIFICATIONS.

THE PRECAST CONCRETE BOX CULVERT EXCLUDING END SECTIONS WILL BE MEASURED ON A METER (LINEAL FOOT) BASIC. THE PRECAST BOX CULVERT WILL BE PAID FOR AT THE CONTRACT UNIT PRICE PER METER (LINEAL FOOT) FOR PRECAST CONCRETE BOX CULVERT, OF THE SIZE SPECIFIED, AND INCLUDES POROUS GRADULAR BACKFILL EXCAVATION EXCEPT EXCAVATION OF ROCK AND/OR UNSTABLE OR UNSUITABLE MATERIAL BELOW BEDDING GRADE

THE PRECAST CONCRETE BOX CULVERT END SECTION WILL BE MEASURED ON AN EACH BASIS. THE END SECTIONS WILL BE PAID FOR AT THE CONCTRACT UNIT PRICE EACH FOR BOX CULVERT END SECTIONS, OF THE CULVERT NUMBER SPECIFIED, AND INCLUDE EXCAVATION, TOEWALL AND COLLARS.

* ALL DIMENSIONS SHOULD BE VERIFIED WITH SUPPLIER.

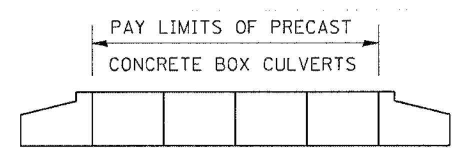

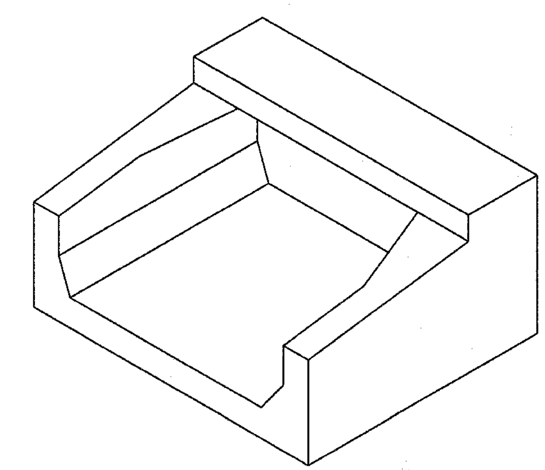

ISOMETRIC VIEW

DIMENSIONS (FOR ASTM C789) *

SPAN X RISE (ft) meter	T mm (INCHES)	A mm (FT.-IN.)	B mm (FT.-IN.)	C mm (INCHES)	E mm (FT.-IN.)	F mm (FT.-IN.)	G mm (FT.-IN.)	H mm (FT.-IN.)	SLOPE (X : Y)
0.6 x 0.6 (2'x2')	100 (4)	800 (2-8)	800 (2-8)	100 (4)	900 (3-0)	900 (3-0)	300 (1-0)	300 (1-0)	1:3
0.9 x 0.6 (3'x2')	100 (4)	1100 (3-8)	800 (2-8)	100 (4)	900 (3-0)	900 (3-0)	300 (1-0)	300 (1-0)	1:3
0.9 x 0.75 (3'x2.5')	100 (4)	1100 (3-8)	950 (3-2)	100 (4)	900 (3-0)	900 (3-0)	375 (1-3)	375 (1-3)	1:3
0.9 x 0.9 (3'x3')	100 (4)	1100 (3-8)	1100 (3-8)	100 (4)	600 (2-0)	1200 (4-0)	500 (1-8)	400 (1-4)	1:3
1.2 x 0.6 (4'x2')	125 (5)	1450 (4-10)	850 (2-10)	125 (5)	900 (3-0)	900 (3-0)	300 (1-0)	300 (1-0)	1:3
1.2 x 0.9 (4'x3')	125 (5)	1450 (4-10)	1150 (3-10)	125 (5)	600 (2-0)	1200 (4-0)	500 (1-8)	400 (1-4)	1:3
1.2 x 1.2 (4'x4')	125 (5)	1450 (4-10)	1450 (4-10)	125 (5)	600 (2-0)	1200 (4-0)	600 (2-0)	600 (2-0)	1:2
1.5 x 0.6 (5'x2')	150 (6)	1800 (6-0)	900 (3-0)	150 (6)	900 (3-0)	900 (3-0)	300 (1-0)	300 (1-0)	1:3
1.5 x 0.9 (5'x3')	150 (6)	1800 (6-0)	1200 (4-0)	150 (6)	600 (2-0)	1200 (4-0)	500 (1-8)	400 (1-4)	1:3
1.5 x 1.2 (5'x4')	150 (6)	1800 (6-0)	1500 (5-0)	150 (6)	600 (2-0)	1200 (4-0)	600 (2-0)	600 (2-0)	1:2
1.5 x 1.5 (5'x5')	150 (6)	1800 (6-0)	1800 (6-0)	150 (6)	600 (2-0)	1200 (4-0)	900 (3-0)	600 (2-0)	1:3
1.8 x 0.6 (6'x2')	175 (7)	2150 (7-2)	950 (3-2)	175 (7)	900 (3-0)	900 (3-0)	300 (1-0)	300 (1-0)	1:3
1.8 x 0.9 (6'x3')	175 (7)	2150 (7-2)	1250 (4-2)	175 (7)	600 (2-0)	1200 (4-0)	500 (1-8)	400 (1-4)	1:3
1.8 x 1.2 (6'x4')	175 (7)	2150 (7-2)	1550 (5-2)	175 (7)	600 (2-0)	1200 (4-0)	600 (2-0)	600 (2-0)	1:2
1.8 x 1.5 (6'x5')	175 (7)	2150 (7-2)	1850 (6-2)	175 (7)	600 (2-0)	1200 (4-0)	900 (3-0)	600 (2-0)	1:2
1.8 x 1.8 (6'x6')	175 (7)	2150 (7-2)	2150 (7-2)	175 (7)	600 (2-0)	1200 (4-0)	1200 (4-0)	600 (2-0)	1:2

SPAN X RISE (ft) meter	T mm (INCHES)	A mm (FT.-IN.)	B mm (FT.-IN.)	C mm (INCHES)	E mm (FT.-IN.)	F mm (FT.-IN.)	G mm (FT.-IN.)	H mm (FT.-IN.)	SLOPE (X : Y)
2.1 x 0.9 (7'X3')	200 (8)	2500 (8-4)	1300 (4-4)	200 (8)	600 (2-0)	1200 (4-0)	300 (1-0)	600 (2-0)	1:2
2.1 x 1.2 (7'x4')	200 (8)	2500 (8-4)	1600 (5-4)	200 (8)	600 (2-0)	1200 (4-0)	600 (2-0)	600 (2-0)	1:2
2.1 x 1.5 (7'x5')	200 (8)	2500 (8-4)	1900 (6-4)	200 (8)	600 (2-0)	1200 (4-0)	900 (3-0)	600 (2-0)	1:2
2.1 x 1.8 (7'x6')	200 (8)	2500 (8-4)	2200 (7-4)	200 (8)	600 (2-0)	1200 (4-0)	1200 (4-0)	600 (2-0)	1:2
2.1 x 2.1 (7'x7')	200 (8)	2500 (8-4)	2500 (8-4)	200 (8)	600 (2-0)	1200 (4-0)	1500 (5-0)	600 (2-0)	1:2
2.4 x 0.9 (8'x3')	200 (8)	2800 (9-4)	1300 (4-4)	200 (8)	600 (2-0)	1200 (4-0)	300 (1-0)	600 (2-0)	1:2
2.4 x 1.2 (8'x4')	200 (8)	2800 (9-4)	1600 (5-4)	200 (8)	600 (2-0)	1200 (4-0)	600 (2-0)	600 (2-0)	1:2
2.4 x 1.5 (8'x5')	200 (8)	2800 (9-4)	1900 (6-4)	200 (8)	600 (2-0)	1200 (4-0)	900 (3-0)	600 (2-0)	1:2
2.4 x 1.8 (8'x6')	200 (8)	2800 (9-4)	2200 (7-4)	200 (8)	600 (2-0)	1200 (4-0)	1200 (4-0)	600 (2-0)	1:2
2.4 x 2.1 (8'x7')	200 (8)	2800 (9-4)	2500 (8-4)	200 (8)	600 (2-0)	1200 (4-0)	1500 (5-0)	600 (2-0)	1:2
2.4 x 2.4 (8'x8')	200 (8)	2800 (9-4)	2800 (9-4)	200 (8)	600 (2-0)	1200 (4-0)	1800 (6-0)	600 (2-0)	1:2
2.7 x 0.9 (9'x3')	225 (9)	3150 (10-6)	1350 (4-6)	225 (9)	600 (2-0)	1200 (4-0)	300 (1-0)	600 (2-0)	1:2
2.7 x 1.2 (9'x4')	225 (9)	3150 (10-6)	1650 (5-6)	225 (9)	600 (2-0)	1200 (4-0)	600 (2-0)	600 (2-0)	1:2
2.7 x 1.5 (9'x5')	225 (9)	3150 (10-6)	1950 (6-6)	225 (9)	600 (2-0)	1200 (4-0)	900 (3-0)	600 (2-0)	1:2
2.7 x 1.8 (9'x6')	225 (9)	3150 (10-6)	2250 (7-6)	225 (9)	600 (2-0)	1200 (4-0)	1200 (4-0)	600 (2-0)	1:2
2.7 x 2.1 (9'x7')	225 (9)	3150 (10-6)	2600 (8-6)	225 (9)	600 (2-0)	1200 (4-0)	1500 (5-0)	600 (2-0)	1:2

SPAN X RISE (ft) meter	T mm (INCHES)	A mm (FT.-IN.)	B mm (FT.-IN.)	C mm (INCHES)	E mm (FT.-IN.)	F mm (FT.-IN.)	G mm (FT.-IN.)	H mm (FT.-IN.)	SLOPE (X : Y)
2.7 x 2.4 (9'x8')	225 (9)	3150 (10-6)	2900 (9-6)	225 (9)	600 (2-0)	1200 (4-0)	1800 (6-0)	600 (2-0)	1:2
2.7 x 2.7 (9'x9')	225 (9)	3150 (10-6)	3150 (10-6)	225 (9)	600 (2-0)	1200 (4-0)	2100 (7-0)	600 (2-0)	1:2
3.0 x 0.9 (10'x3')	255 (10)	3550 (11-8)	1425 (4-8)	250 (10)	600 (2-0)	1200 (4-0)	500 (1-8)	400 (1-4)	1:3
3.0 x 1.2 (10'x4')	255 (10)	3550 (11-8)	1725 (5-8)	250 (10)	600 (2-0)	1200 (4-0)	300 (1-0)	600 (2-0)	1:2
3.0 x 1.5 (10'x5')	255 (10)	3550 (11-8)	2025 (6-8)	250 (10)	600 (2-0)	1200 (4-0)	600 (2-0)	600 (2-0)	1:2
3.0 x 1.8 (10'x6')	255 (10)	3550 (11-8)	2350 (7-8)	250 (10)	600 (2-0)	1200 (4-0)	900 (3-0)	600 (2-0)	1:2
3.0 x 2.1 (10'x7')	255 (10)	3550 (11-8)	2650 (8-8)	250 (10)	600 (2-0)	1200 (4-0)	1500 (5-0)	600 (2-0)	1:2
3.0 x 2.4 (10'x8')	255 (10)	3550 (11-8)	2950 (9-8)	250 (10)	600 (2-0)	1200 (4-0)	1800 (6-0)	600 (2-0)	1:2
3.0 x 2.7 (10'x9')	255 (10)	3550 (11-8)	3250 (10-8)	250 (10)	600 (2-0)	1200 (4-0)	2100 (7-0)	600 (2-0)	1:2
3.0 x 3.0 (10'x10')	255 (10)	3550 (11-8)	3550 (11-8)	250 (10)	600 (2-0)	1200 (4-0)	2400 (8-0)	600 (2-0)	1:2
3.3 x 0.9 (11'x3')	280 (11)	3900 (12-10)	1475 (4-10)	275 (11)	600 (2-0)	1200 (4-0)	300 (1-0)	600 (2-0)	1:2
3.3 x 1.2 (11'x4')	280 (11)	3900 (12-10)	1775 (5-10)	275 (11)	600 (2-0)	1200 (4-0)	600 (2-0)	600 (2-0)	1:2
3.3 x 1.5 (11'x5')	280 (11)	3900 (12-10)	2075 (6-10)	275 (11)	600 (2-0)	1200 (4-0)	900 (3-0)	600 (2-0)	1:2
3.3 x 1.8 (11'x6')	280 (11)	3900 (12-10)	2400 (7-10)	275 (11)	600 (2-0)	1200 (4-0)	1200 (4-0)	600 (2-0)	1:2
3.3 x 2.1 (11'x7')	280 (11)	3900 (12-10)	2700 (8-10)	275 (11)	600 (2-0)	1200 (4-0)	1500 (5-0)	600 (2-0)	1:2
3.3 x 2.4 (11'x8')	280 (11)	3900 (12-10)	3000 (9-10)	275 (11)	600 (2-0)	1200 (4-0)	1800 (6-0)	600 (2-0)	1:2

SPAN X RISE (ft) meter	T mm (INCHES)	A mm (FT.-IN.)	B mm (FT.-IN.)	C mm (INCHES)	E mm (FT.-IN.)	F mm (FT.-IN.)	G mm (FT.-IN.)	H mm (FT.-IN.)	SLOPE (X : Y)
3.3 x 2.7 (11'x9')	280 (11)	3900 (12-10)	3300 (10-10)	275 (11)	600 (2-0)	1200 (4-0)	2100 (7-0)	600 (2-0)	1:2
3.3 x 3.0 (11'x10')	280 (11)	3900 (12-10)	3600 (11-10)	275 (11)	600 (2-0)	1200 (4-0)	2400 (8-0)	600 (2-0)	1:2
3.3 x 3.3 (11'x11')	280 (11)	3900 (12-10)	3900 (12-10)	275 (11)	600 (2-0)	1200 (4-0)	2700 (9-0)	600 (2-0)	1:2
3.6 x 0.9 (12'x3')	300 (12)	4250 (14-0)	1525 (5-0)	300 (1-0)	600 (2-0)	1200 (4-0)	300 (1-0)	600 (2-0)	1:2
3.6 x 1.2 (12'x4')	300 (12)	4250 (14-0)	1825 (6-0)	300 (1-0)	600 (2-0)	1200 (4-0)	600 (2-0)	600 (2-0)	1:2
3.6 x 1.5 (12'x5')	300 (12)	4250 (14-0)	2125 (7-0)	300 (1-0)	600 (2-0)	1200 (4-0)	900 (3-0)	600 (2-0)	1:2
3.6 x 1.8 (12'x6')	300 (12)	4250 (14-0)	2425 (8-0)	300 (1-0)	600 (2-0)	1200 (4-0)	1200 (4-0)	600 (2-0)	1:2
3.6 x 2.1 (12'x7')	300 (12)	4250 (14-0)	2725 (9-0)	300 (1-0)	600 (2-0)	1200 (4-0)	1500 (5-0)	600 (2-0)	1:2
3.6 x 2.4 (12'x8')	300 (12)	4250 (14-0)	3025 (10-0)	300 (1-0)	600 (2-0)	1200 (4-0)	1800 (6-0)	600 (2-0)	1:2

PLOT DATE = Fri Mar 23 11:23:09 2007
FILE NAME = c:\projects\p207400\d07400spl.dgn
PLOT SCALE = 50.0000 '/ IN.
REFERENCE = REF

REVISED 3-19-02