CONTRACT NO. 66400

F.A.S. RTE.	SECTION	COUNTY	TOTAL SHEETS	SHEET NO.
1279	*	LASALLE	43	6
STA.		TO STA.		
FED. ROAD DIST. NO.	ILLINOIS	FED. AID PROJECT		

*1-RS, (106,107)RS-2, 108 RS-1 & I

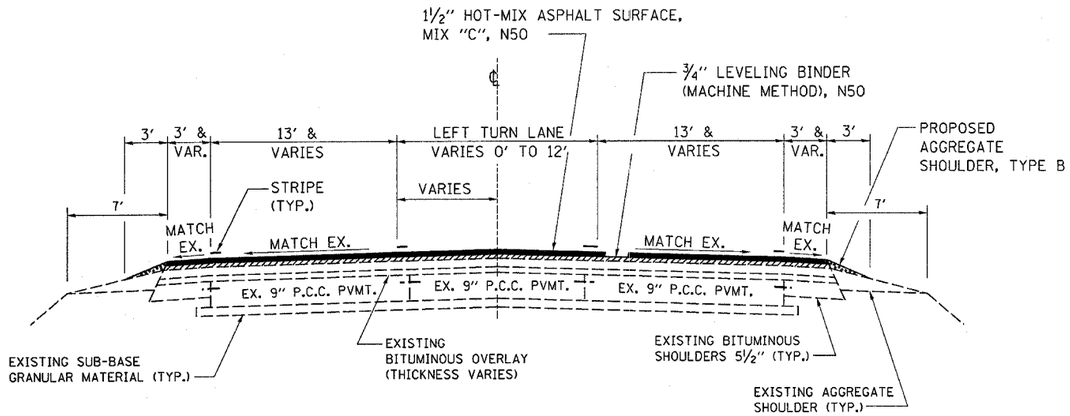

TYPICAL SECTION NO. 1

IL 178

(FACING TOWARD INTERSECTION)

STA. 1001+29.02 TO STA. 1006+17.80

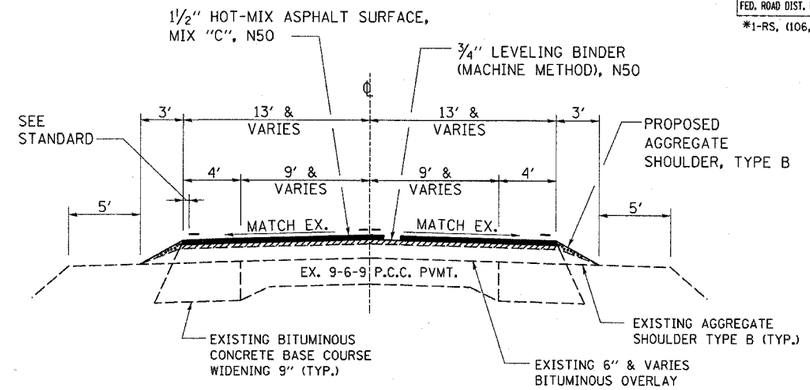

TYPICAL SECTION NO. 3

IL 178

STA. 1013+67.80 TO STA. 1029+90
STA. 1035+10 TO STA. 1117+20
STA. 1124+55 TO STA. 1188+00

NOTE:
HOT-MIX ASPHALT SURFACE REMOVAL, ¾" HAS BEEN INCLUDED TO BE USED AT THE ENGINEER'S DISCRETION FOR PROFILING PURPOSES

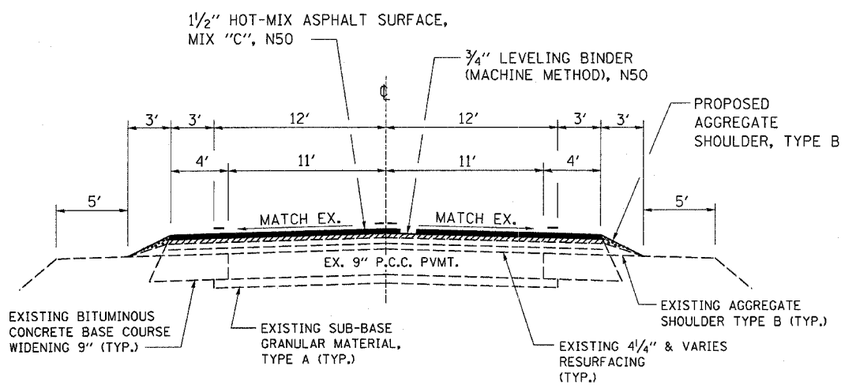

TYPICAL SECTION NO. 2

IL 178

STA. 1006+17.80 TO STA. 1013+67.80

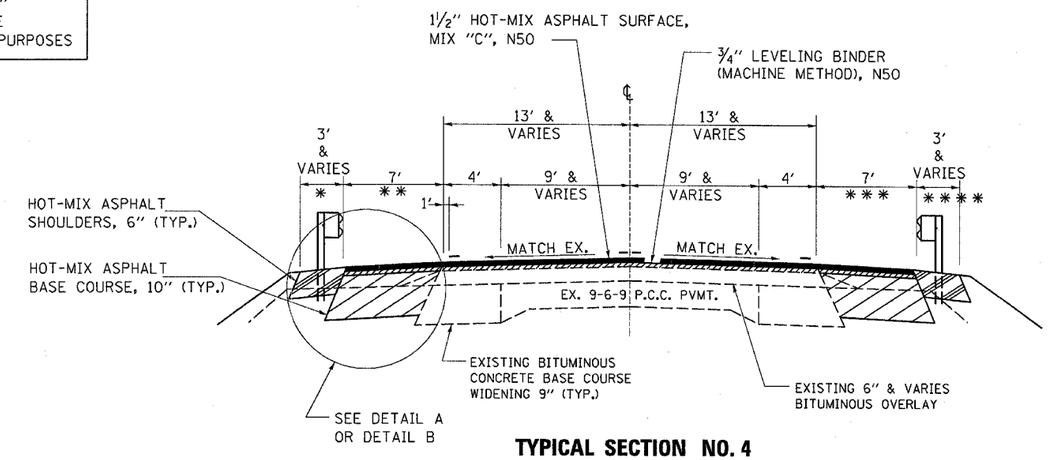

TYPICAL SECTION NO. 4

IL 178
AT PROPOSED S.N. 050-2041
(EXISTING S.N. 050-0153)

STA. 1029+90 TO STA. 1035+10

SEE STAGING PLANS FOR STA. 1032+20 TO STA. 1032+80

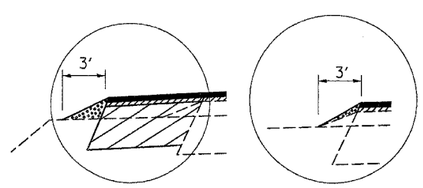

DETAIL A DETAIL B

THREE FOOT AGGREGATE SHOULDER, TYPE B PLACED EXCEPT WHERE NOTED OTHERWISE

* STA. 1030+90.02 TO STA. 1034+70.85 LT
** STA. 1029+90 TO STA. 1035+10 LT.

*** STA. 1029+90 TO STA. 1035+10 RT.
**** STA. 1030+27.52 TO STA. 1034+08.36 RT

REVISIONS	
NAME	DATE

ILLINOIS DEPARTMENT OF TRANSPORTATION

TYPICAL SECTIONS

SCALE: VERT. HORIZ.
DATE
DRAWN BY
CHECKED BY

3/22/2007 6:01:07 PM
c:\projects\ep0200\details.dgn