CONTRACT NO. 70276

F.A.P. RTE.	SECTION	COUNTY	TOTAL SHEETS	SHEET NO.
820	*	DOUGLAS	57	6

* (37,37-1,2&3)RS-1

EXISTING TYPICAL CROSS SECTION (1)

IL 130

STATION 109+00.00 TO STATION 216+91.00 **

** STATION EQUATION:
(1) 216+91.00 (BK) =
(2) 1+00.97 (AH)

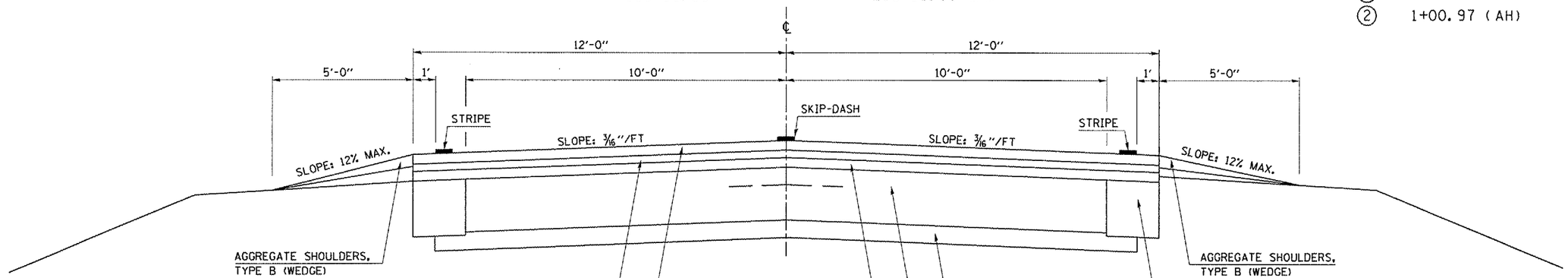

* STA 176+20 BEGIN TRANSITION FROM 1½" TO 2" AT STA 176+50

2" FROM STA 176+50 TO STA 181+00

STA 181+00 BEGIN TRANSITION FROM 2" TO 1½" AT STA 181+30

PROPOSED TYPICAL CROSS SECTION (1)

IL 130

STATION 109+00.00 TO STATION 216+91.00 **

** STATION EQUATION:
(1) 216+91.00 (BK) =
(2) 1+00.97 (AH)

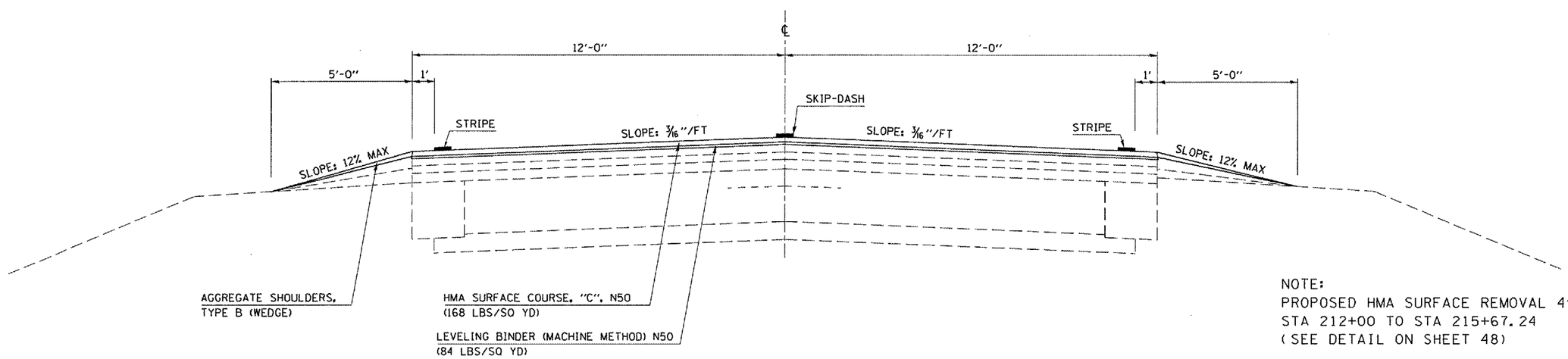

NOTE:
PROPOSED HMA SURFACE REMOVAL 4"
STA 212+00 TO STA 215+67.24
(SEE DETAIL ON SHEET 48)

PLOT DATE = 3/26/2007
FILE NAME = c:\projects\d507002 (v8)\typicals.dgn
PLOT SCALE = 105.8824 ' / IN.
USER NAME = phillipsjr