93438

RTE.	SECTION	COUNTY	TOTAL SHEETS	SHEET NO.
F.A.S.1746	*	MONTGOMERY	11	6
PROJECT				

* 03-00122-00-BR

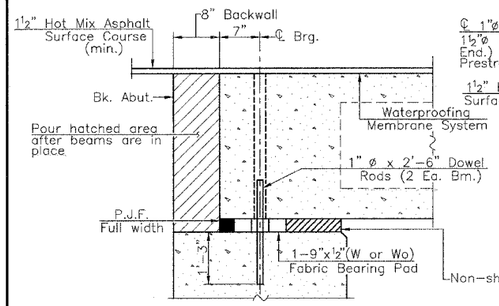

SECTION THRU ABUTMENT
(At Right Angles)

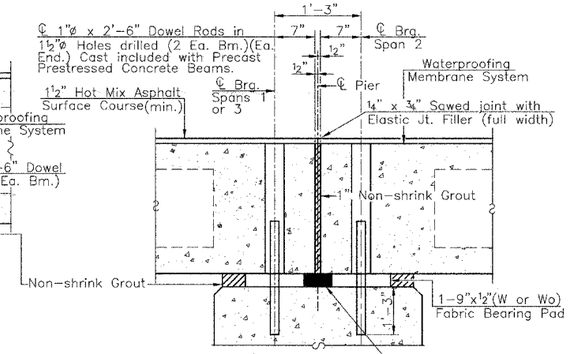

PIER ELEVATION
(At Rt. Angles)

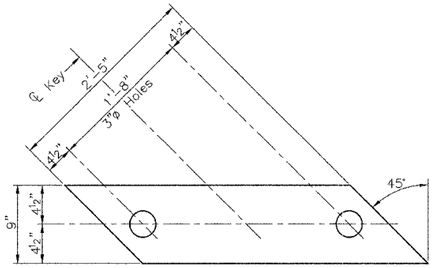

FABRIC BEARING PAD
Interior Wo
(24 Required)

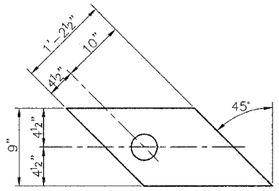

FABRIC BEARING PAD
Exterior W
(36 Required)

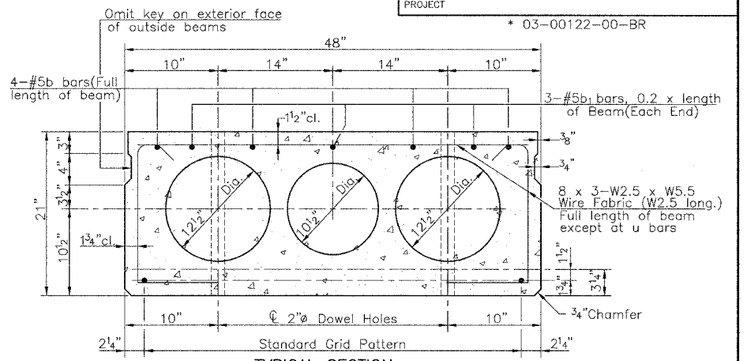

TYPICAL SECTION

Note: Place strands symm. about ℄ of Beam

All Spans – 22-½"ø Strands, Each Strand Stressed to 30,900 lbs.
14-Strands 1¾" up, 4-Strands 3¼" up, 2-Strands 6" up, 2-Strands 15" up

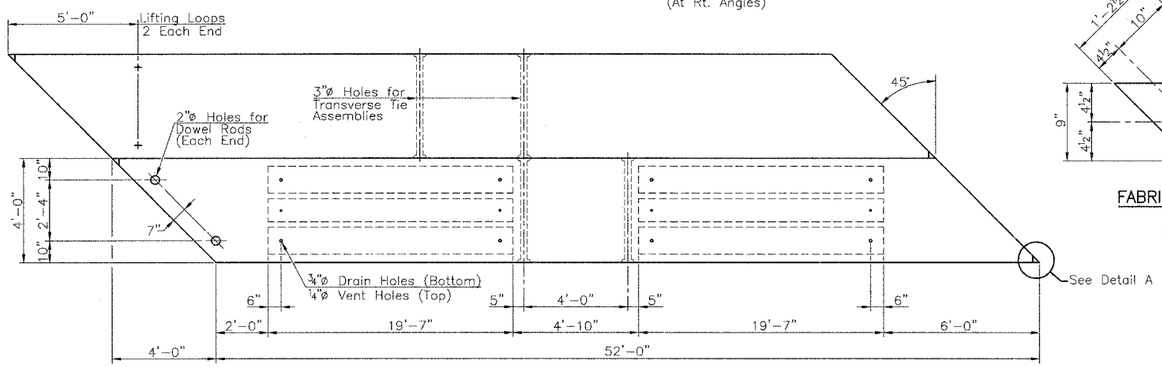

PLAN
(Spans 1 & 3)
14 Required

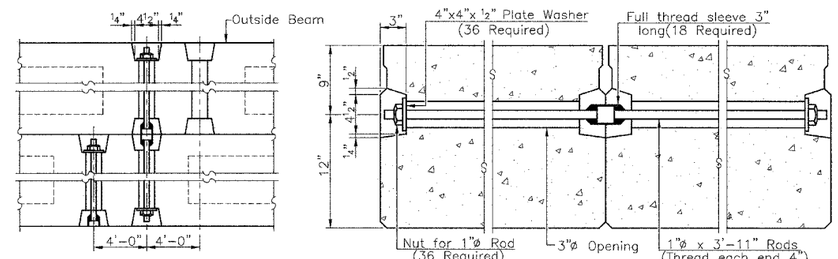

TYPICAL TRANSVERSE TIE ASSEMBLY

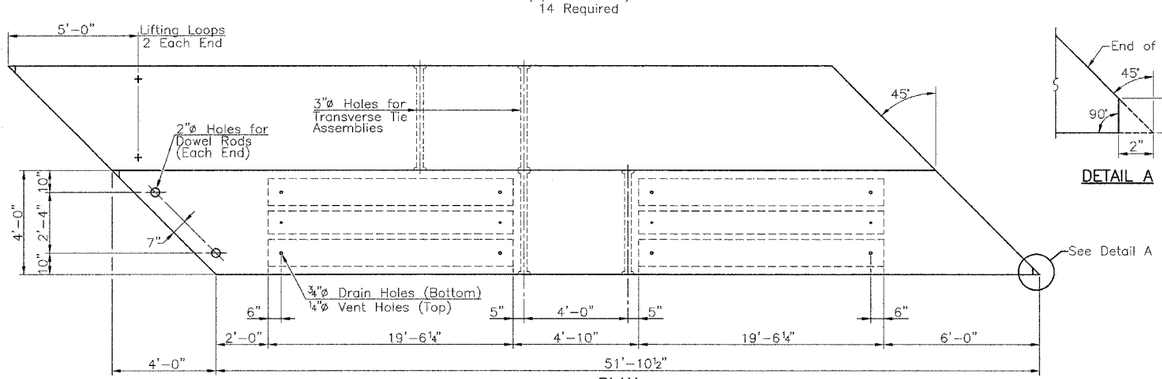

PLAN
(Span 2)
7 Required

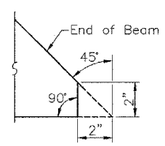

DETAIL A

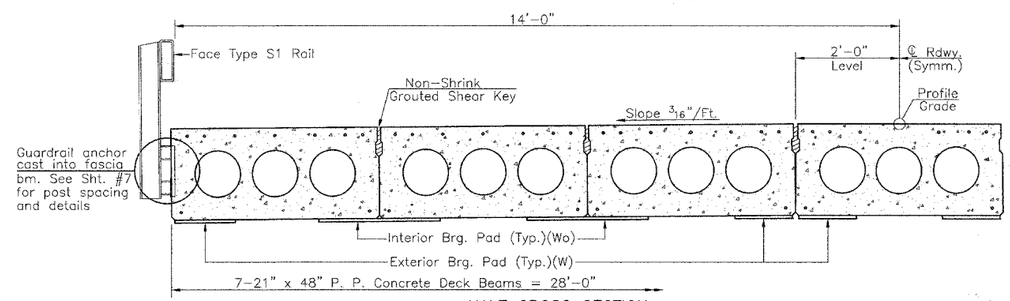

HALF CROSS SECTION

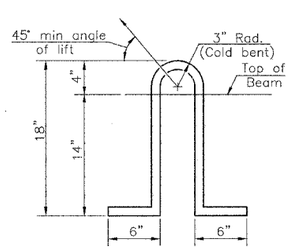

LIFTING LOOP DETAIL

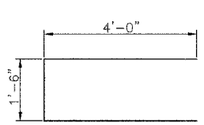

BAR u

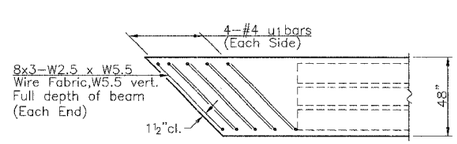

END PLAN

NOTES

After beams have been erected, holes shall be drilled into the substructure and anchor dowels placed. Dowel holes shall be filled with non-shrink grout to top of beam and allowed to cure for min. 24 hours prior to grouting the shear keys.

Prestressing steel shall be uncoated high strength, low relaxation 7-wire strand, Grade 270.

The nominal diameter shall be ½" and the nominal cross-sectional area shall be 0.153 sq. in.

Lifting loops shall be 2 - ½"ø -270 ksi strands as shown.

Reinforcement bars shall conform to ASTM A706 Grade 60 (IL. Modified).

The bearing seat surfaces shall be adjusted by shimming to assure firm and even bearing. Two ⅛" fabric adjusting shims of the dimensions of the Exterior Bearing Pad shall be provided for each bearing.

Keyway surfaces shall be cleaned to remove form oil or other bond breaking material prior to shipment of the beams. Cleaning shall be done by sandblasting the keyway areas between top of the beams and the bottom edge of the key.

Required Release Strength, f'ci, shall be 4000 p.s.i.

The 1"ø rods in the transverse tie assembly shall be tightened to a snug fit and the threads set. Pockets that receive transverse tie bar on outside be filled with grout after transveres tie assembly is in place.

A Corrosion Inhibitor shall be used in the concrete for the precast, prestressed concrete deck beams, according to Article 1020.05(b)(12) of the Standard Specifications.

Non-shrink grout shall be used in all longitudinal keyways and drilled dowel holes. and between bottom of beams and top of abutments & pier caps.

BILL OF MATERIAL

BAR	NO.	SIZE	LENGTH	SHAPE
Precast Prestressed Concrete Deck Beams (21")			Sq. Ft.	4365
Waterproofing Membrane System			Sq. Yd.	492
Portland Cement Mortar Fairing Course			Foot	936

SUPERSTRUCTURE
F.A.S. 1746 (COFFEEN ROAD)
OVER EAST FORK SHOAL CREEK
SECTION 03-00122-00-BR
MONTGOMERY COUNTY

FILE NAME: MOC28M (REV. 2/15/07)

ALLEN HENDERSON & ASSOCIATES, INC. CONSULTING CIVIL AND STRUCTURAL ENGINEERS SPRINGFIELD, IL. PHONE: (217) 544-8033