F.A.I. RTE.	SECTION	COUNTY	TOTAL SHEETS	SHEET NO
57	77-13, 4-1, 4-2RS-2	PULASKI	52	8
STA.		TO STA.		
FED. ROAD DIST. NO.		ILLINOIS	FED. AID PROJECT	

CONTRACT NO. 98829

TYPICAL SECTION #2

PULASKI COUNTY
SB & NB LANES
F.A.I. RTE. 57
(LOOKING IN DIRECTION OF TRAVEL)

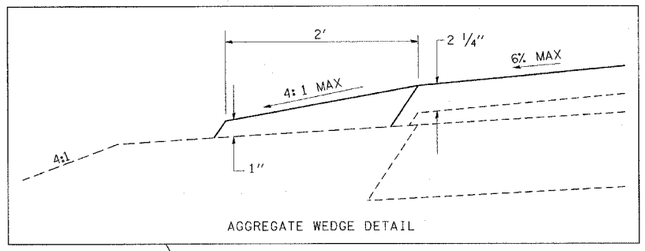

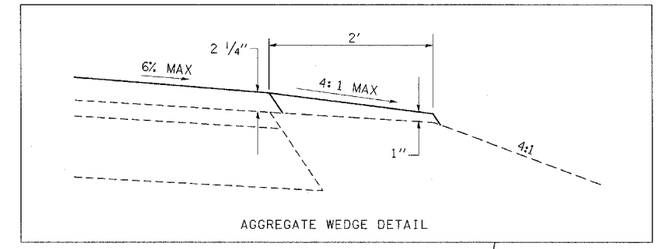

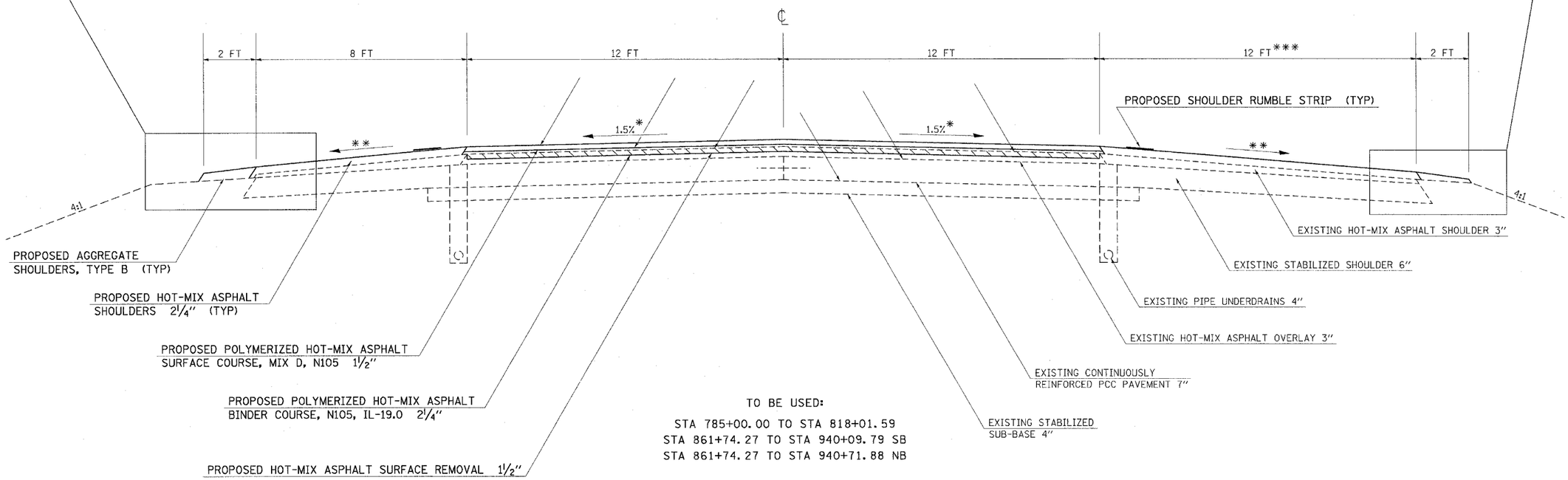

TO BE USED:

STA 785+00.00 TO STA 818+01.59
STA 861+74.27 TO STA 940+09.79 SB
STA 861+74.27 TO STA 940+71.88 NB

OMISSIONS:

SOUTHBOUND

STA 872+28.27 TO STA 875+82.27
STA 879+24.53 TO STA 891+90.01

NORTHBOUND

STA 872+84.55 TO STA 876+38.55
STA 879+96.85 TO STA 891+90.01

NOTES:

* 1.5% PAVEMENT CROSS SLOPE TO BE ACHIEVED WITH HOT-MIX ASPHALT SURFACE REMOVAL

** MATCH EXISTING SHOULDER SLOPE UP TO 6% MAXIMUM.

*** EXISTING HMA SHOULDER WIDTH VARIES FROM 10 FT TO 13 FT IN AREAS WITH EXISTING TIMBER CURB

REQUIRED PAVING SEQUENCE:

1. MILL EX HMA SURF 1 1/2" PASSING & DRIVING
2. PAVE HMA BIND CSE 2 1/4" PASSING & DRIVING
3. PAVE HMA SURF CSE 1 1/2" PASSING
4. PAVE ADJACENT HMA SHLD 2 1/4" PASSING
5. PAVE HMA SURF CSE 1 1/2" DRIVING
6. PAVE ADJACENT HMA SHLD 2 1/4" DRIVING

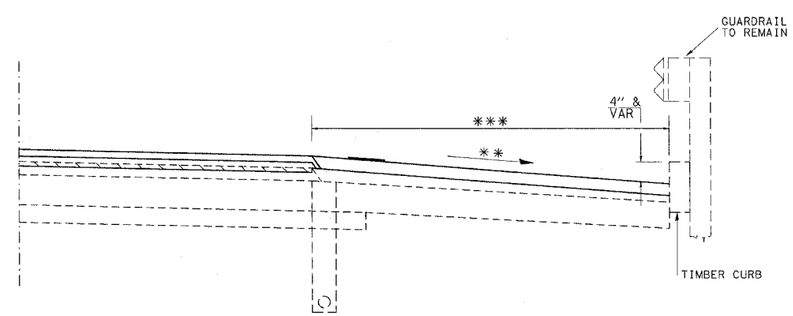

SB LANES: STA 869+80 TO STA 879+86
NB LANES: STA 868+94 TO STA 894+50

PLOT DATE = 3/21/2007
FILE NAME = c:\pwworking\d04\d98482\d98482msc32.dgn
PLOT SCALE = 50.0000 ' / IN.
USER NAME = thomashf

TYPICAL SECTIONS (I-57 MAINLINE)