CONTRACT NO. 98963

F.A.I. RTE.	SECTION	COUNTY	TOTAL SHEETS	SHEET NO.
57/64	(41-3)HBK	JEFFERSON		258
STA.		TO STA.		
FED. ROAD DIST. NO.	ILLINOIS	FED. AID PROJECT		

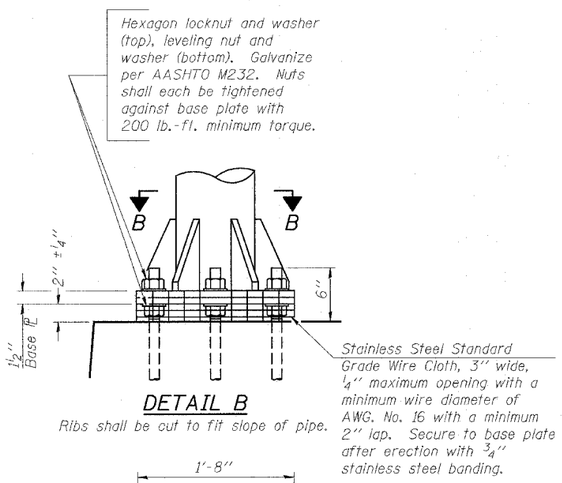

DETAIL B

Ribs shall be cut to fit slope of pipe.

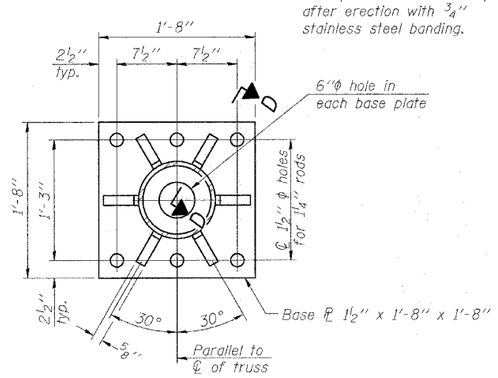

SECTION B-B

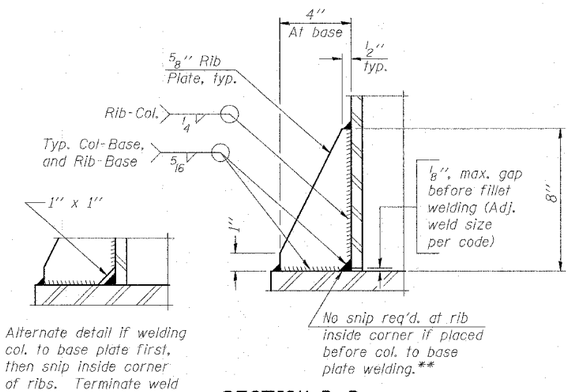

SECTION D-D

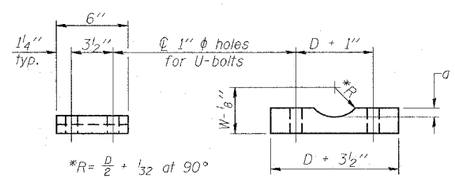

$*R = \frac{D}{2} + \frac{1}{32}$ at 90°

D = Outside Diameter of Chord.
For W, see Base Sheet OS-A-6.

SADDLE SHIM DETAIL

ASTM B26 Alloy 356-F
or
ASTM B209 Alloy 6061-T651
(4 required per sign truss)

Truss Chord Nominal Dia.	a
5"	3/4"
5 1/2"	13/16"
6"	7/8"
6 1/2"	15/16"
7"	1"

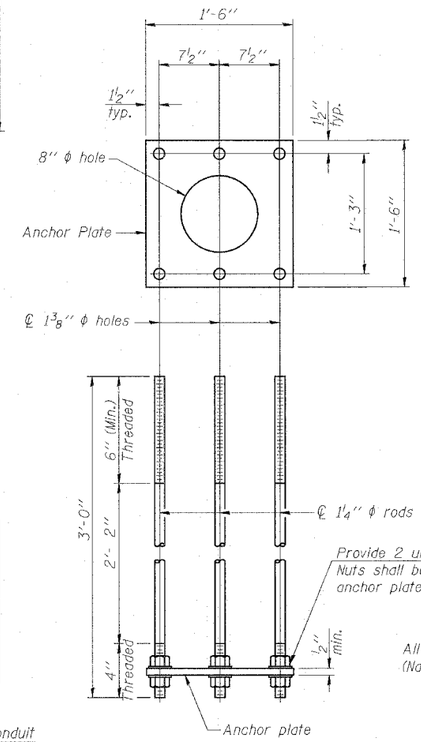

All Thread = NC (National Coarse)

ANCHOR ROD DETAIL

Spread Footing Foundation

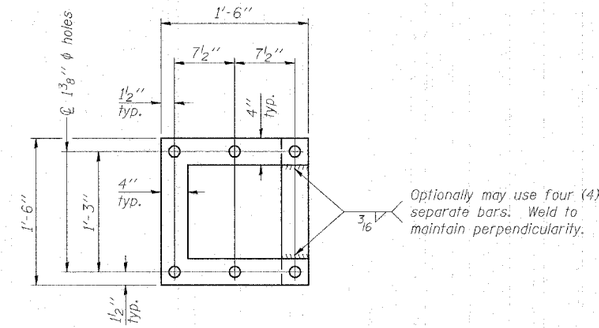

POSITIONING PLATE(S)

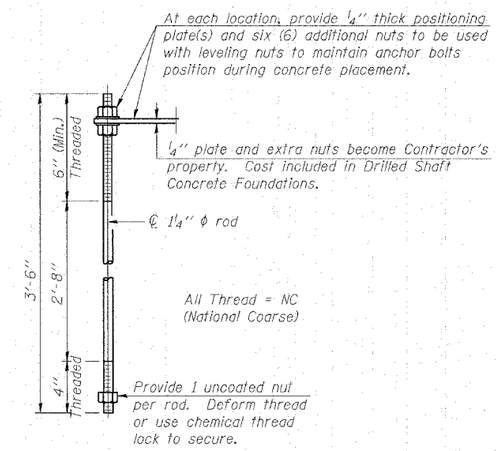

ANCHOR ROD DETAIL

Drilled Shaft Foundation

Anchor rods shall conform to AASHTO M314 Grade 36 or 50 and meet Charpy V-Notch (CVN) energy of 15 lb.-ft. at 40° F. Galvanize upper 12" per AASHTO M232. No welding shall be permitted on rods.

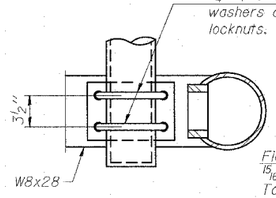

SECTION C-C

(Handhole cover not shown)

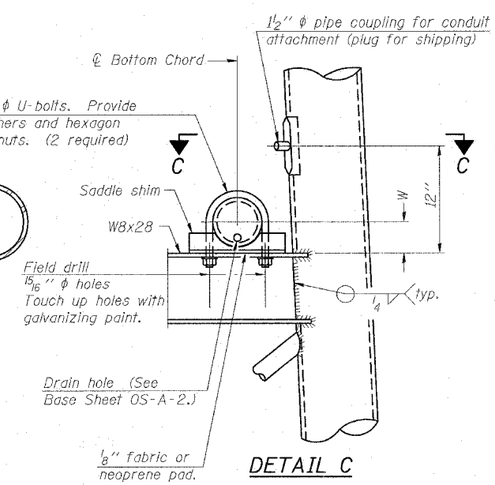

DETAIL C

10" ϕ PIPE SUPPORT FRAME DETAILS

NUMBER	REVISION	DATE

REVISIONS NAME	DATE

ILLINOIS DEPARTMENT OF TRANSPORTATION

OVERHEAD SIGN STRUCTURES SUPPORT FRAME DETAILS ALUMINUM TRUSS

SCALE: VERT. NONE HORIZ.
DATE
DRAWN BY
CHECKED BY

PLOT DATE = 5/11/2007
FILE NAME = s:\engineering\final\consultant\vetmondrive\dot supplied info\d9035080sgn.dgn
PLOT SCALE = 50.0000 ' / IN.
USER NAME = russellsf

OS-A-6A 7/01/2006

SIGNING DETAILS