F.A.I. RTE.	SECTION	COUNTY	TOTAL SHEETS	SHEET NO.
57/64	(41-3)HBK	JEFFERSON	518	281
STA.		TO STA.		
FED. ROAD DIST. NO.	ILLINOIS	FED. AID PROJECT		

CONTRACT NO. 98963

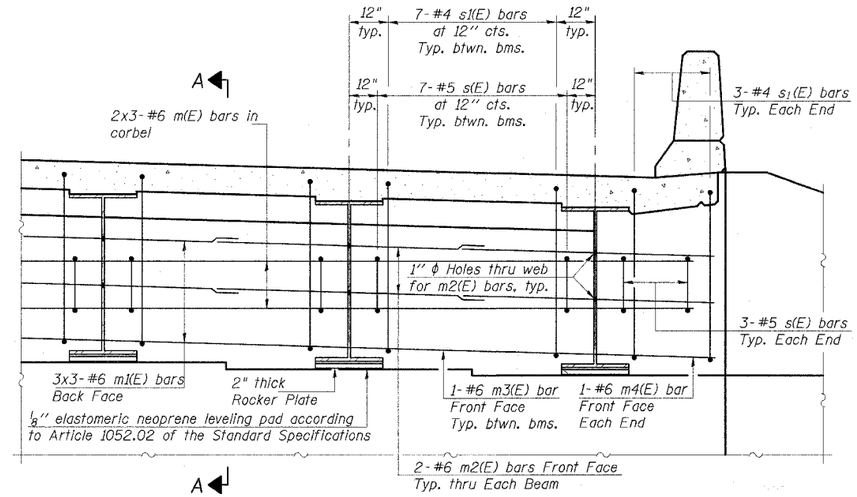

DIAPHRAGM ELEVATION AT ABUTMENT

Notes:

Reinforcement bars in diaphragm are billed with superstructure on sheet 12 of 25.

Concrete in diaphragm is included with Concrete Superstructure on sheet 12 of 25.

For details of bars s(E) & s1(E) see sheet 12 of 25.

The s(E) and s1(E) bars shall be placed parallel to the beams. Spacing for these bars shall be at right angles to the beams.

Bars indicated thus 2x3-#6 etc. indicates 2 lines of bars with 3 lengths per line.

See Sheet 23 of 25 for Bar Splicer Details.

MIN. BAR LAP

#6 bar = 2'-9"

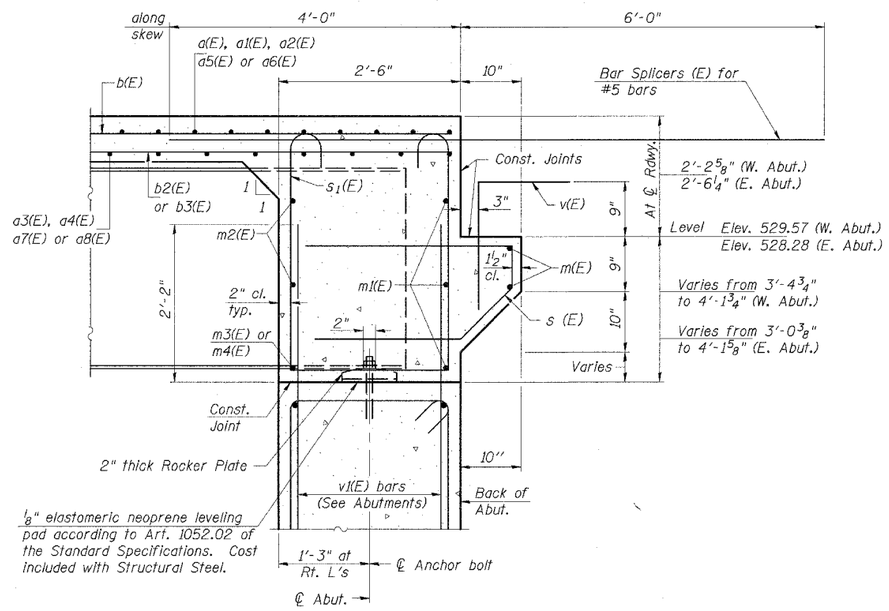

SECTION A-A

Dimensions at right angles to abutment, except as shown.

END DIAPHRAGM DETAILS
VETERANS MEMORIAL DR. over F.A.I. ROUTES 57/64
SECTION (41-3)HBK
JEFFERSON COUNTY
STATION 49+72.27
STRUCTURE NO. 041-0108

© Copyright Hanson Professional Services Inc. 2007

HANSON

JOB NO. 98S2019A

DATE 03-14-07

March 2007 Submittal

LAYOUT	MMM	03/12/07	
DRAWN	DAB	03/12/07	/ /
REVIEWED			

LAYOUT	GBR	02/02/04	
DRAWN	Rbd	02/02/04	
REVIEWED	TFH	02/02/04	

03\20\2007 10:45 AM
I:\98Jobs\98s2019a\Struct\Steel\Fitel Plans 03-18-04\FP-01.dgn