F.A.I. RTE.	SECTION	COUNTY	TOTAL SHEETS	SHEET NO.
57/64	(41-3)HBK	JEFFERSON	518	298
STA.		TO STA.		
FED. ROAD DIST. NO.	ILLINOIS	FED. AID PROJECT		

CONTRACT NO. 98963

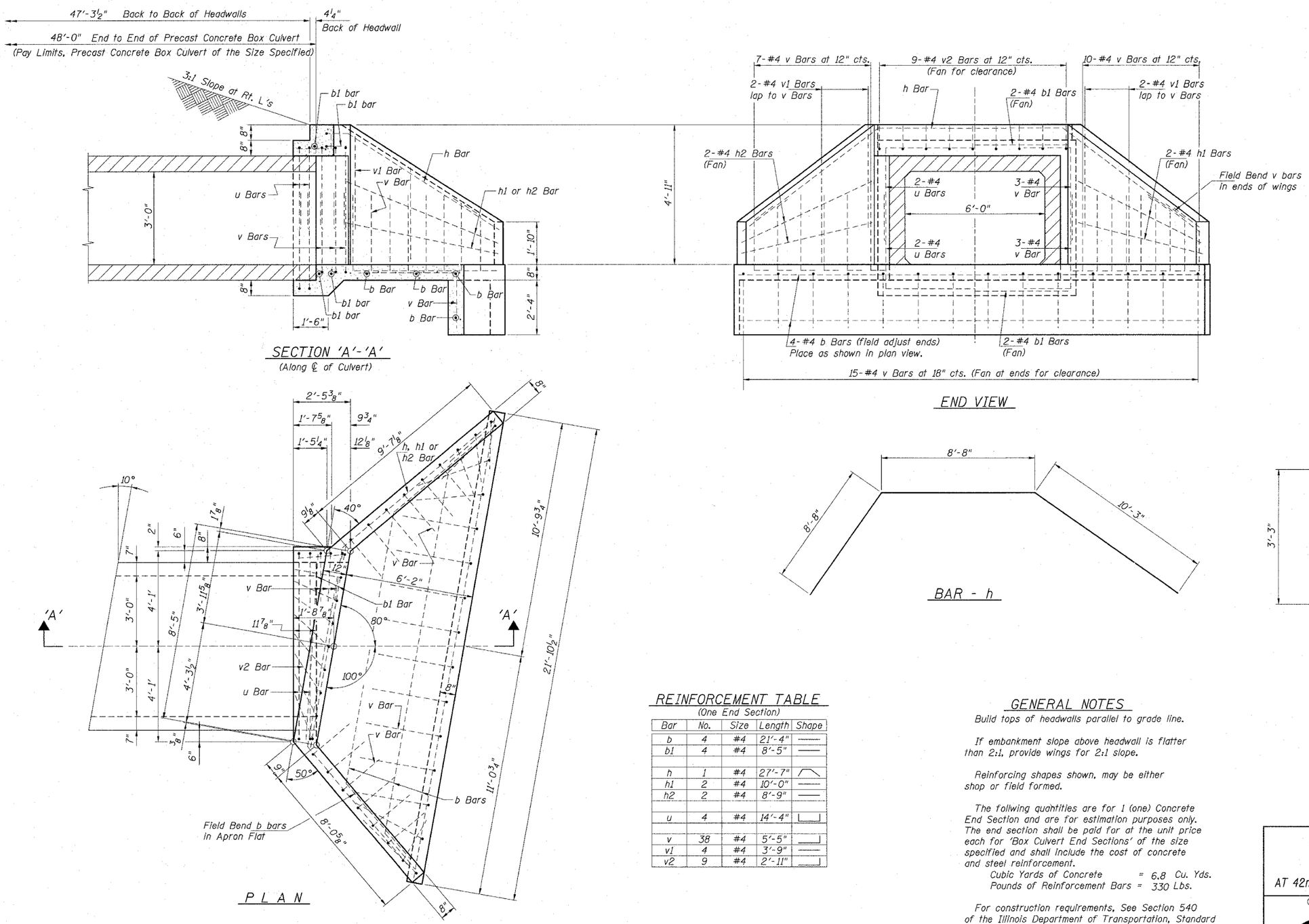

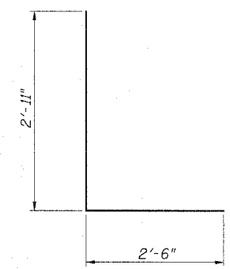

BAR - v

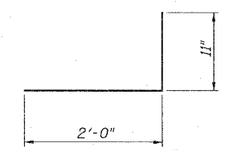

BAR - v2

BAR - h

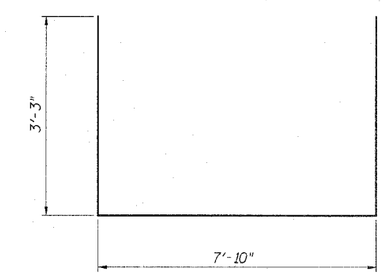

BAR - u

REINFORCEMENT TABLE

(One End Section)

Bar	No.	Size	Length	Shape
b	4	#4	21'-4"	
b1	4	#4	8'-5"	
h	1	#4	27'-7"	
h1	2	#4	10'-0"	
h2	2	#4	8'-9"	
u	4	#4	14'-4"	
v	38	#4	5'-5"	
v1	4	#4	3'-9"	
v2	9	#4	2'-11"	

GENERAL NOTES

Build tops of headwalls parallel to grade line.

If embankment slope above headwall is flatter than 2:1, provide wings for 2:1 slope.

Reinforcing shapes shown, may be either shop or field formed.

The follwing quantities are for 1 (one) Concrete End Section and are for estimation purposes only. The end section shall be paid for at the unit price each for 'Box Culvert End Sections' of the size specified and shall include the cost of concrete and steel reinforcement.

Cubic Yards of Concrete = 6.8 Cu. Yds.
Pounds of Reinforcement Bars = 330 Lbs.

For construction requirements, See Section 540 of the Illinois Department of Transportation, Standard Specifications for Road and Bridge Construction.

REINFORCED CONCRETE END SECTION
FOR PRECAST BOX CULVERT
36" HIGH x 72" WIDE
AT 42nd STREET & ILLINOIS POWER ACCESS ROAD

© Copyright Hanson Professional Services Inc. 2007

HANSON

JOB NO. 98S2019A

DATE 03-14-07

LAYOUT	TKd	05/20/04
DRAWN	TKd	05/20/04
REVIEWED	BDH	05/20/04

3/21/2007
I:\JBK\DGS\98s2019a\Struct\Sheet\Final Plans 03-18-04\FP-42nd Steel Culvert.sht