STATE OF ILLINOIS
DEPARTMENT OF TRANSPORTATION

ROUTE NO.	SECTION	COUNTY	TOTAL SHEETS	SHEET NO.
-	*	UNION	22	20
FED. ROAD DIST. NO. 7		ILLINOIS	Contract No. 99214	

SHEET NO. 7
9 SHEETS

* 03-01176-00-BR

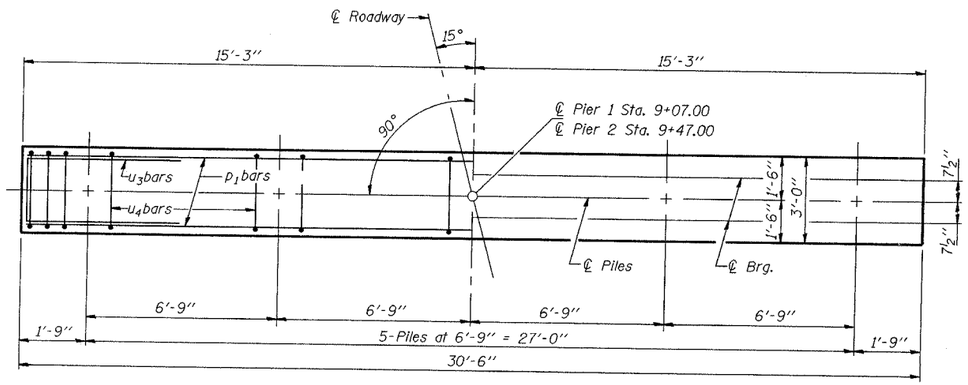

PLAN

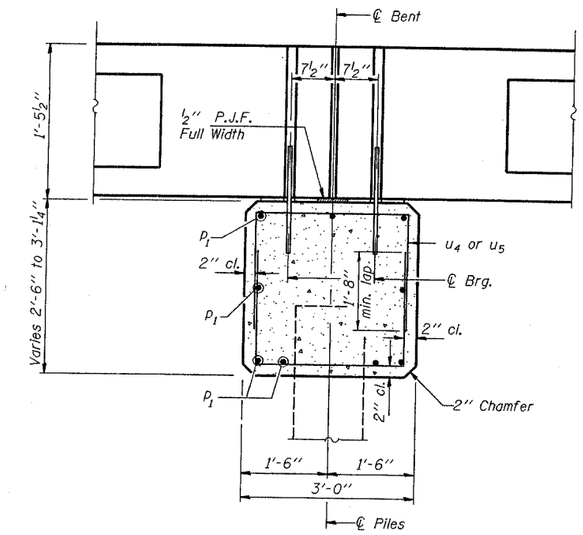

SECTION THRU PIER
(At Right Angles)

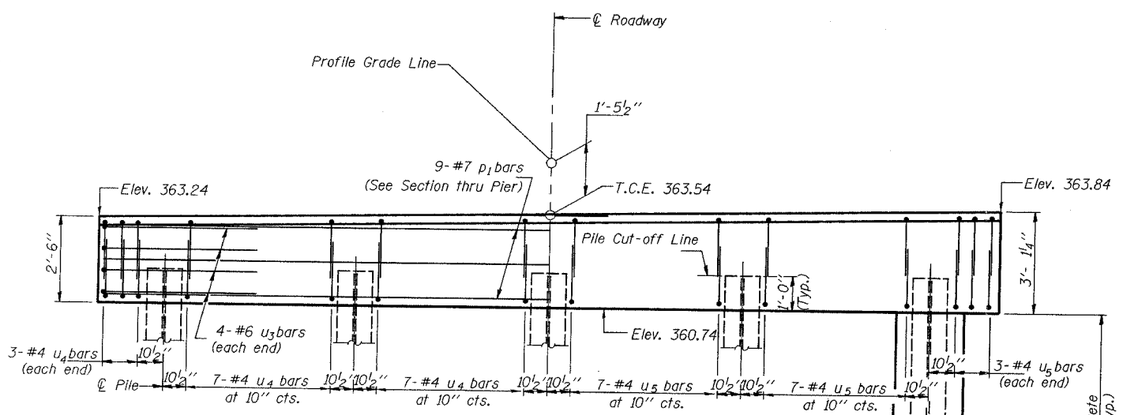

ELEVATION
(Looking North)

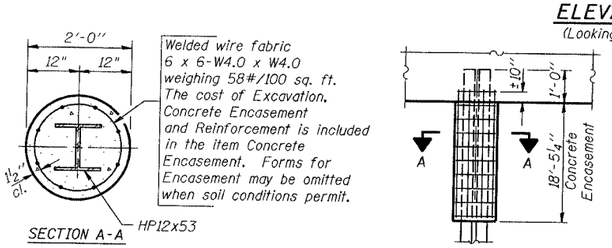

Welded wire fabric 6 x 6-W4.0 x W4.0 weighing 58#/100 sq. ft. The cost of Excavation, Concrete Encasement and Reinforcement is included in the item Concrete Encasement. Forms for Encasement may be omitted when soil conditions permit.

PILE ENCASEMENT DETAIL

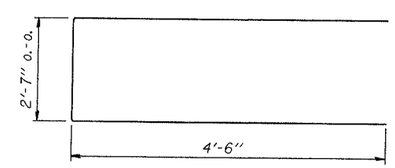

BAR u_3

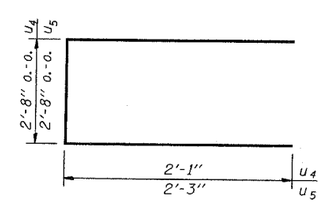

BAR u_4 and u_5

BILL OF MATERIAL FOR TWO PIERS

Bar	No.	Size	Length	Shape
p_1	18	#7	30'-2"	
u_3	16	#6	11'-7"	
u_4	68	#4	6'-10"	
u_5	68	#4	7'-2"	
Concrete Structures			Cu. Yds.	19.0
Reinforcement Bars			Pound	2020
Furnishing Steel Piles HP12x53			Foot	520
Driving Piles			Foot	520
Concrete Encasement			Cu. Yd.	20.7
Test Pile Steel HP 12x53			Each	1
Underwater Structure Excavation Protection - Location 1			Each	1
Underwater Structure Excavation Protection - Location 2			Each	1

DESIGNED	J.F. Schiff
CHECKED	J.K. Klein
DRAWN	SHANE SUMMER
CHECKED	JFS. JKK

APRIL - 3 2007
EXAMINED Thomas J. Domagalski
ENGINEER OF BRIDGE DESIGN
PASSED Ralph E. Anderson
ENGINEER OF BRIDGES AND STRUCTURES

PIER -PILE DATA

Type: Steel HP 12x53
Allowable Resistance Available: 80 kips
Nominal Required Bearing: 240 Kips
Est. Length: 55 ft. Pier 1, 60 ft. Pier 2
No. Req'd. 10 (Includes 1 Test Pile at Pier 1)

NOTE

Reinforcement bars shall conform to the requirements of ASTM 706 Gr. 60, (Il. Modified). See Special Provisions.

PIERS 1 AND 2
STR. NO. 091-3221
MORGAN SCHOOL ROAD
OVER CANY CREEK
SECTION 03-01176-00-BR
UNION COUNTY
STATION 9+27.00

\091-3221.dgn 4/3/2007 12:27:37 PM