IL ROUTE 2
STA. 217+06.00 - STA. 219+44.60

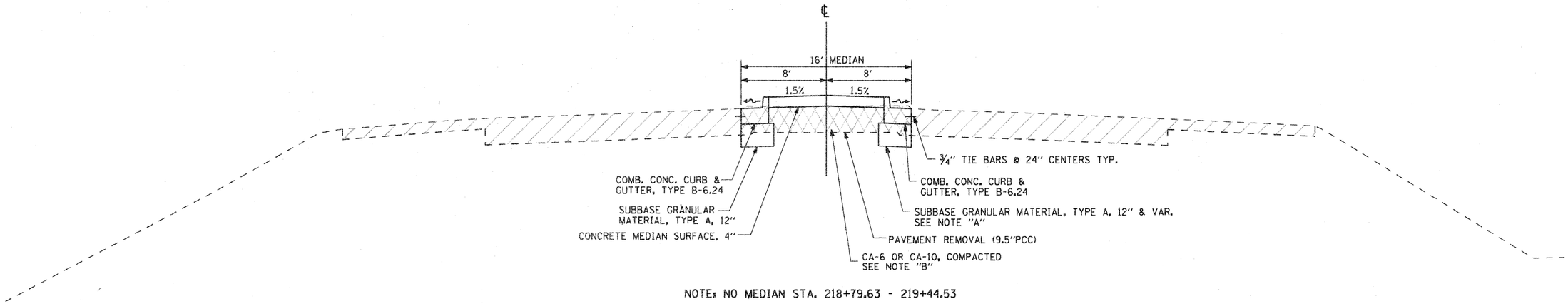

NOTE: NO MEDIAN STA. 218+79.63 - 219+44.53

IL ROUTE 2
STA. 219+44.60 - 223+61.11

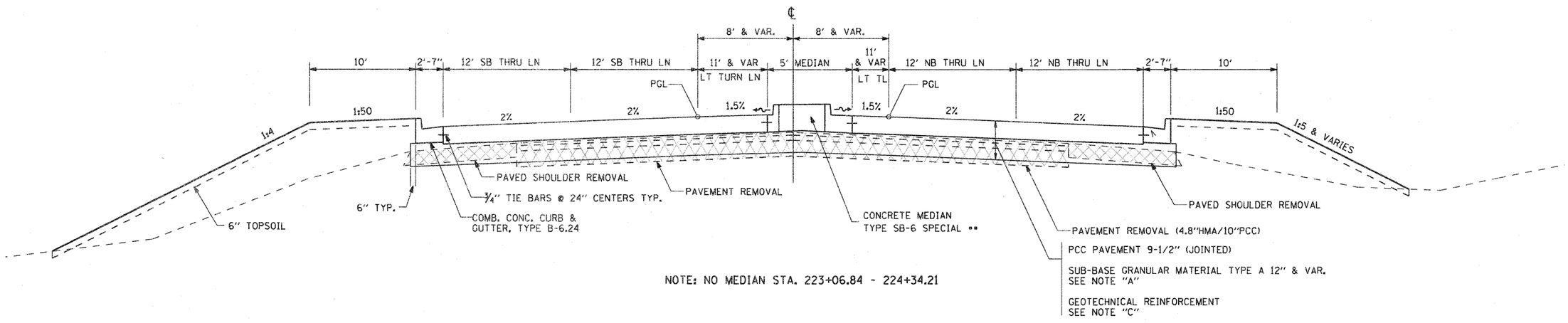

NOTE: NO MEDIAN STA. 223+06.84 - 224+34.21

** CONCRETE MEDIAN TYPE SB-6 SPECIAL
STA. 219+44.53 TO STA. 223+06.84

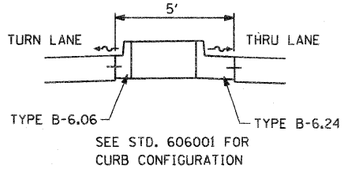

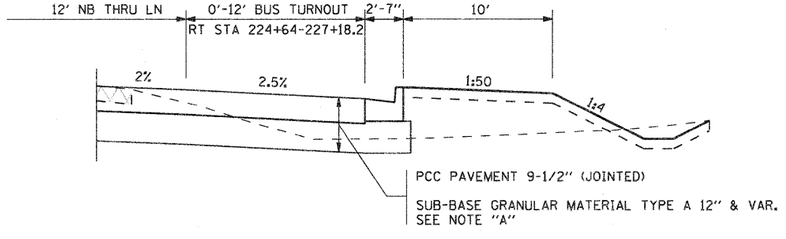

NOTE "A"
SEE SCHEDULE FOR AREAS OF INCREASED DEPTH

NOTE "B"
THE COST OF THE CA-6 OR CA-10 IS TO BE INCLUDED IN THE COST OF EACH TYPE OF MEDIAN

NOTE "C"
SEE SCHEDULE FOR AREAS TO RECEIVE GEOTECHNICAL REINFORCEMENT

FILE NAME = G:\2010\TRANS\B18T001\DGN\Typicals\D01502-Typical.dgn	USER NAME = patp	DESIGNED -	REVISED -	STATE OF ILLINOIS DEPARTMENT OF TRANSPORTATION	FAP 742 (IL 2) TYPICAL SECTIONS	F.A.P. RTE.	SECTION	COUNTY	TOTAL SHEETS	SHEET NO.
		DRAWN -	REVISED -			734	34R	WINNEBAGO	491	17
	PLOT SCALE = 10.0000 ' / IN.	CHECKED -	REVISED -					CONTRACT NO. 64515		
	PLOT DATE = 1/25/2012	DATE -	REVISED -		SCALE: N/A SHEET NO. OF SHEETS STA. TO STA.		ILLINOIS FED. AID PROJECT			