NOTES

The cost of epoxy grouting threaded rods shall be included with Reinforcement Bars, Epoxy Coated.

Plan dimensions and details relative to existing plans are subject to nominal construction variations. The Contractor shall field verify existing dimensions and details affecting new construction and make necessary approved adjustments prior to construction or ordering of materials. Such variations shall not be cause for additional compensation for a change in scope of the work, however, the Contractor will be paid for the quantity actually furnished at the unit price bid for the work.

Reinforcement bars designated (E) shall be epoxy coated.

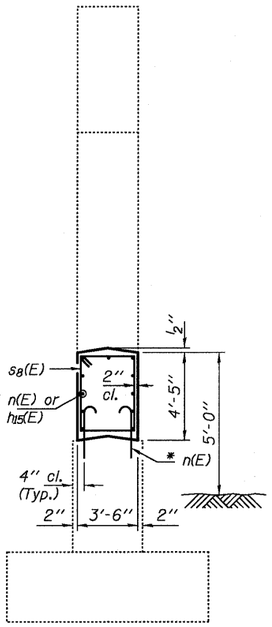

SECTION B-B

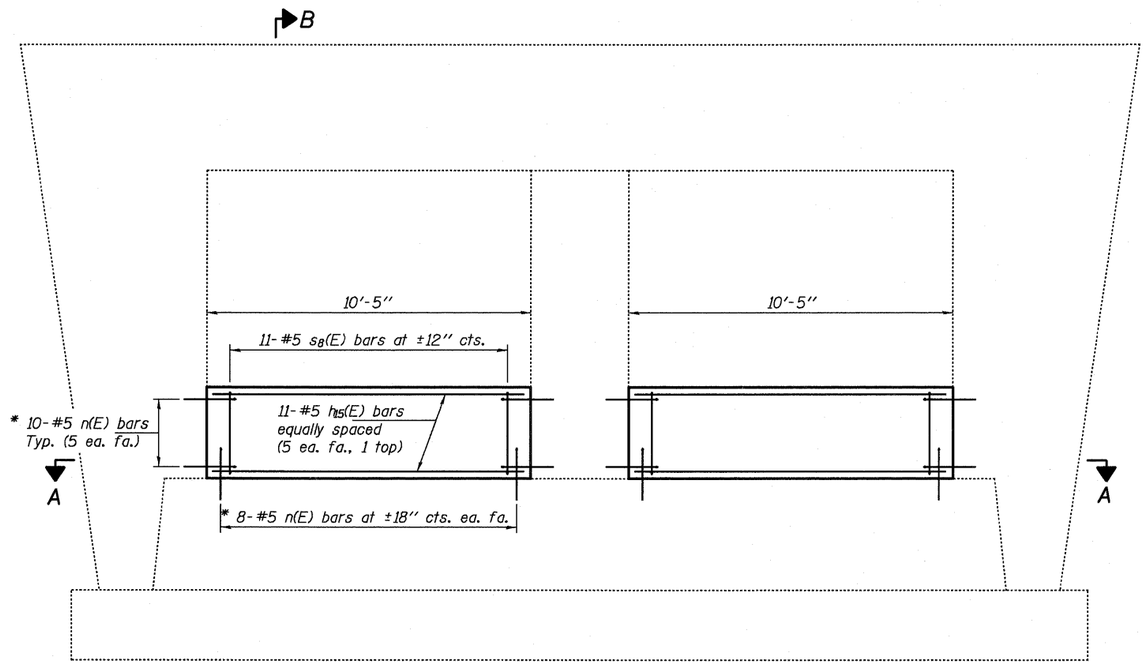

ELEVATION

* Epoxy grout n(E) bars in 9″ min. holes according to Article 584 of the Standard Specifications.

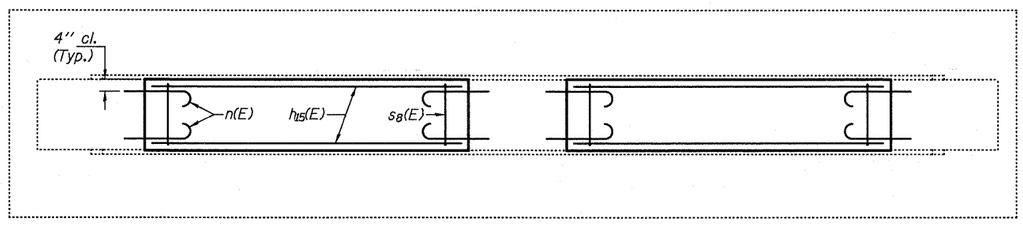

SECTION A-A

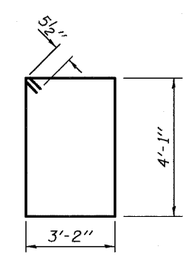

BAR s8(E)

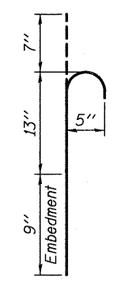

BAR n(E)

BILL OF MATERIAL

Bar	No.	Size	Length	Shape
h15(E)	22	#5	10′-1″	
n(E)	72	#5	2′-5″	
s8(E)	22	#5	15′-5″	
Concrete Structures			Cu. Yd.	11.9
Reinforcement Bars, Epoxy Coated			Pound	770

PRE-FINAL

DATE: 4/23/2012

EXPIRES 11-30-2012

DESIGNED DAB	EXAMINED	DATE - APRIL 23, 2012	STATE OF ILLINOIS DEPARTMENT OF TRANSPORTATION
CHECKED VP	ACTING ENGINEER OF STRUCTURAL SERVICES		
DRAWN baliva	PASSED	REVISED	
CHECKED DAB VP	ACTING ENGINEER OF BRIDGES AND STRUCTURES	REVISED	

PIER 2 CRASHWALL EXTENSION
098-0056

SHEET NO. OF SHEETS

F.A.I. RTE.	SECTION	COUNTY	TOTAL SHEETS	SHEET NO.
88		WHITESIDE	151	104
		CONTRACT NO. 64H77		
		ILLINOIS FED. AID PROJECT		