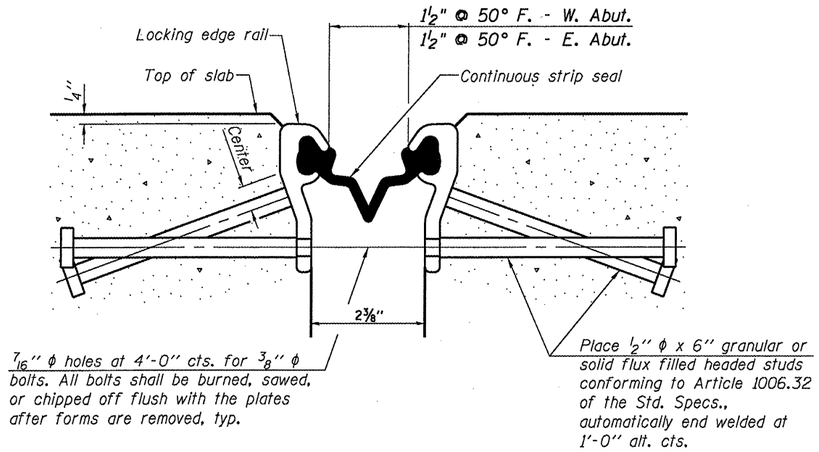

SECTION THRU STRIP SEAL JOINT FOR OVERLAY OVER DECK BEAMS

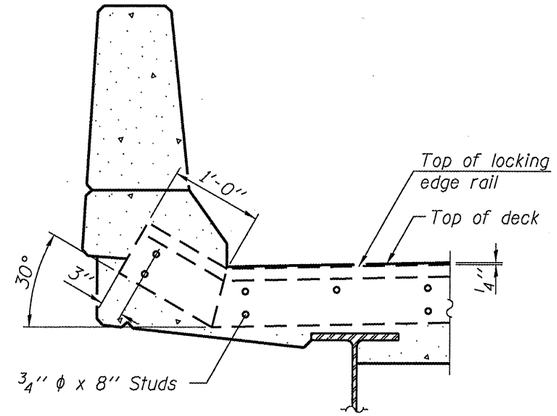

SECTION A-A

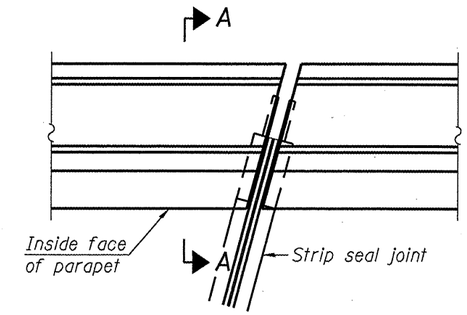

PLAN

(For skews ≤ 30°)

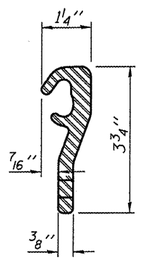

LOCKING EDGE RAIL

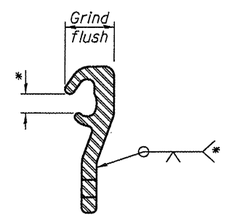

*Omit weld at seal opening.

LOCKING EDGE RAIL SPLICE

STRIP SEAL EXPANSION JOINT AT WEST ABUTMENT

Notes:

The strip seal shall be made continuous and shall have a minimum thickness of ¼". The configuration of the strip seal shall match the configuration of the Locking Edge Rails. Open or "webbed" strip seal gland configurations are not permitted. The gland shall be sized for a maximum rated movement of 4 inches.

The Locking Edge Rails depicted are conceptual only, except for the minimum dimensions shown. The actual configuration of the Locking Edge Rails and matching strip seal may vary from manufacturer to manufacturer. Flanged edge rails will not be allowed. Locking Edge Rails may be spliced at slope discontinuities.

The manufacturer's recommended installation methods shall be followed.

The joint opening and deck dimensions detailed on the superstructure are based on a rolled rail expansion joint. If the Contractor elects to use the welded rail expansion joint, the opening and deck dimensions shall be modified according to the dimensions detailed on this sheet. Required modifications shall be made at no additional cost to the State.

All steel components shall be galvanized after fabrication according to Article 520.03 of the Standard Specifications.

Maximum space between rail segments at stage lines shall be 3/16", sealed with a suitable sealant.

Parapet plates and anchorage studs for skews > 30° included in the cost of Preformed Joint Strip Seal.

BILL OF MATERIAL FOR STRUCTURE NO. 032-0011 (EB)

Item	Unit	Total
Preformed Joint Strip Seal	Foot	90

FILE NAME = c:\pw_work\pwidot\carpenterdj\d0295082\D366C08-sht-details.dgn	USER NAME = carpenterdj	DESIGNED - RLW	REVISED -
		DRAWN - RLW	REVISED -
	PLOT SCALE = 100:0 '/ in.	CHECKED -	REVISED -
	PLOT DATE = 4/5/2012	DATE -	REVISED -

STATE OF ILLINOIS
DEPARTMENT OF TRANSPORTATION

STRIP SEAL EXPANSION JOINT DETAILS FOR STRUCTURE NO. 032-0011 (E.B.)

SCALE: | SHEET 4 OF 9 SHEETS | STA. 1131+21.81 TO STA. 1132+59.17

F.A.I. RTE.	SECTION	COUNTY	TOTAL SHEETS	SHEET NO.
80	(32-2B)I-1	GRUNDY	27	22
		CONTRACT NO. 66C08		
		ILLINOIS FED. AID PROJECT		