CONTRACT NO. 72829

F.A. RTE.	SECTION	COUNTY	TOTAL SHEETS	SHEET NO.
75	84-12; 11-3	•	729	352
STA. N/A		TO STA. N/A		
FED. ROAD DIST. NO. 5	ILLINOIS	FED. AID PROJECT		

• SANGAMON AND CHRISTIAN

PROP. IL. RTE 29 CURVE-2 DATA
PI STA. = 1513+04.87
Δ = 57° 39′ 14″ (LT)
D = 1° 05′ 29″
R = 5,249.33′
T = 2,889.06′
L = 5,282.14′
E = 742.51′
e = 4.00%
T.R. = 86.25′
S.E. RUN = 230.00′
P.C. STA. = 1484+15.81
P.T. STA. = 1536+97.95

PR MEDIAN RADIUS POINTS
(A) STA. 1511+02.35, 25.00′ LT.
(B) STA. 1511+44.75, 14.28′ LT.
(C) STA. 1511+44.57, 3.40′ RT.
(D) STA. 1511+05.07, 13.00′ RT.

PR MEDIAN RADIUS POINTS
(E) STA. 1512+75.11, 13.00′ LT.
(F) STA. 1512+38.19, 4.45′ RT.
(G) STA. 1512+37.69, 13.24′ RT.
(H) STA. 1512+82.39, 25.00′ RT.

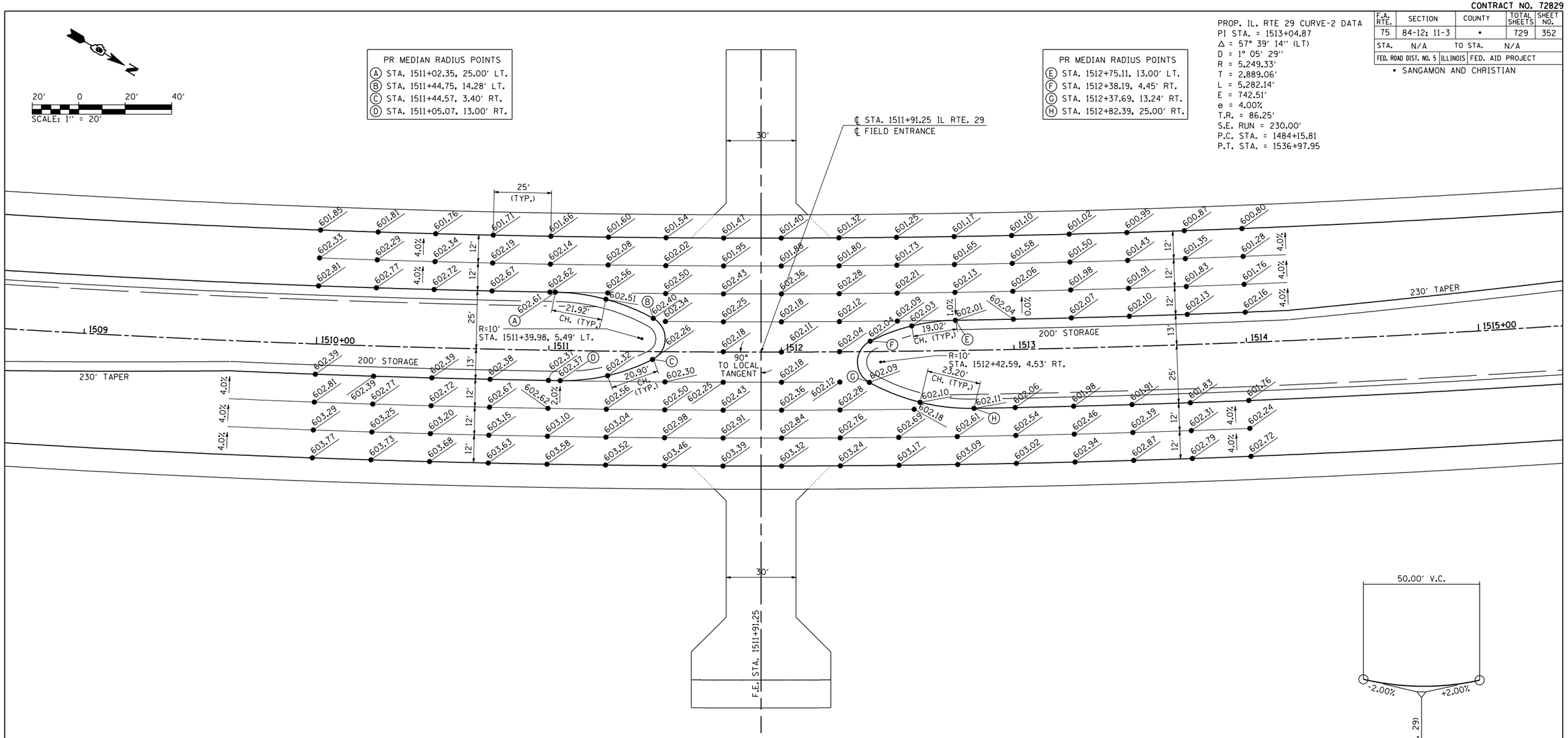

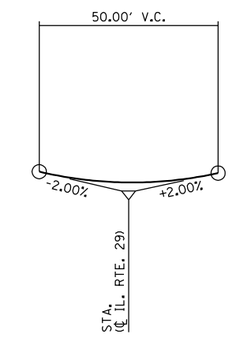

MEDIAN CROSSOVER ℄ PROFILE

REVISIONS	
NAME	DATE

ILLINOIS DEPARTMENT OF TRANSPORTATION

INTERSECTION DETAIL IL. RTE. 29
AT MEDIAN CROSSOVER
STA 1511+91.25

SCALE: 1″ = 20′ DRAWN BY: B.M.B.
DATE: 03/06/2012 CHECKED BY: J.M.M.

Default
L:\IDOT\030600\draw\sheets\D672829-sht-intSecDet-Sta0512.dgn
4/23/2012